MANUAL

pco.®

pco.dimax 3.6 ST CLHS
pco.dimax 3.6 DS ST CLHS

HIGH-SPEED STREAMING CAMERA SERIES

excelitas®

Excelitas PCO GmbH asks you to carefully read and follow the instructions in this document.
For any questions or comments, please feel free to contact us at any time.

address:	Excelitas PCO GmbH Donaupark 11 93309 Kelheim, Germany
phone:	(+49) 9441-2005-0 (+1) 866-662-6653 (+86) 0512-6763-4643
mail:	pco@excelitas.com
web:	www.excelitas.com/pco

pco.dimax 3.6 ST CLHS user manual 1.0.0

Released April 2026

©Copyright Excelitas PCO GmbH

This work is licensed under the Creative Commons Attribution-NoDerivatives 4.0 International License. To view a copy of this license, visit http://creativecommons.org/licenses/by-nd/4.0/ or send a letter to Creative Commons, PO Box 1866, Mountain View, CA 94042, USA.

Contents

1 Safety **5**

2 Introduction **6**

3 Package contents **7**

4 Quick Start Guide **10**

5 Camera overview **11**
5.1 Camera (air-cooled) components . . . 11
5.2 Camera (liquid-cooled) components . . . 12
5.3 Ports, connectors and cables . . . 13
5.4 Input/Output signal specifications . . . 13
5.5 Lens mount adapter system . . . 14
5.5.1 How to switch to C-mount/TFL-mount . . . 14
5.5.2 How to switch to F-mount/EF-mount . . . 15
5.5.3 How to perform fine focal adjustment . . . 16
5.6 Camera mounting . . . 18
5.7 Transport handle . . . 20

6 Setup and configuration **21**
6.1 System requirements . . . 21
6.2 Frame grabber . . . 21
6.3 Cooling system . . . 22
6.3.1 Forced-air cooling . . . 22
6.3.2 Liquid cooling . . . 22
6.4 Hardware setup . . . 24
6.5 Software options . . . 25
6.5.1 PCO user interface software . . . 25
6.5.2 PCO software development kits . . . 25
6.5.3 Application integrations . . . 25

7 Operation modes **26**
7.1 Basic operation . . . 26
7.1.1 Switching the camera on/off . . . 26
7.1.2 LED signals and their meanings . . . 27
7.1.3 Setting the exposure time . . . 28
7.2 Defining Regions of Interest (ROI) . . . 29
7.3 Applying binning . . . 29
7.4 Using lens control . . . 29
7.5 Selecting a gain mode . . . 30
7.6 Choosing a shutter mode . . . 30
7.6.1 Global shutter . . . 31
7.6.2 Double shutter . . . 33
7.7 Understanding status signals . . . 35
7.7.1 Status Busy . . . 35
7.7.2 Status Exposure . . . 35
7.7.3 Timing characteristics . . . 36
7.8 Configuring trigger modes . . . 36
7.8.1 Auto Sequence . . . 37
7.8.2 Software Trigger . . . 38
7.8.3 External Exposure Start . . . 39
7.8.4 External Exposure Control . . . 41

7.9 Utilizing Acquire Enable 43
7.10 Enabling sequence triggering 44
7.10.1 Sequence Trigger 44
7.10.2 Record Stop Sequence Trigger 45

8 Maintenance 46
8.1 Cleaning 46
8.1.1 General cleaning 46
8.1.2 Input window cleaning 46
8.2 Storage 47

9 Troubleshooting 48

10 Recycling 49

11 Warranty 50

1 Safety

This camera system is scientific measuring equipment designed to capture images for analysis. It is intended to be used by technicians, engineers, and scientists. Before using the camera system, read this manual carefully and keep a copy accessible for future reference. The camera system may only be used indoors and according to the instructions in this manual. Provisions, limitations, and operating conditions stated herein must be observed. For safety reasons, unauthorized modifications and alterations of the system are prohibited. Opening the camera voids the warranty.

DANGER
POWER SUPPLY, CABLE OR PLUG: Risk of electric shock, which can cause death or serious injury. Before each use, inspect the power supply, cable, and plug for damage. Do not use if damaged.

WARNING
VOLTAGE-CARRYING PARTS INSIDE: Risk of electric shock or injury. Do not insert any objects into the camera through its openings.

WARNING
MOISTURE ENTERS CAMERA: Risk of electric shock or injury. Keep the camera dry and protect it from extreme ambient temperature changes to prevent water condensation and damage. Operate and store the camera only within the specified temperature and humidity ranges.

CAUTION
CABLES: Risk of injury from tripping over loose cables. Keep cables organized and out of the way to prevent tripping hazards.

NOTICE
HUMIDITY, DUST, OR RADIATION: Humidity, dust, or X-rays may damage the camera. Do not operate the camera in humid or dusty environments or areas with high levels of X-ray radiation.

NOTICE
LIQUIDS: If liquids have penetrated the camera, damage may occur. Switch off the camera immediately, disconnect it from power, and contact customer support.

NOTICE
SHOCK AND VIBRATIONS: Falling, dropping, or exposure to vibrations may cause damage or affect device performance over time. Always place the camera on a flat, stable surface or mount it securely using the mounting threads.

NOTICE
HOUSING DAMAGE: If the camera has been dropped or the housing is damaged, switch off the camera immediately, disconnect it from power, and contact customer support.

NOTICE
LENS (ADAPTER) MOUNTING: Forcing lens mount adapters or lenses onto the camera may damage the threads. Always screw them gently onto the camera flange.

2 Introduction

Thank you for choosing our high-speed streaming camera, designed for demanding industrial and scientific imaging where precise timing, reliability, and continuous acquisition are essential. Engineered for clarity, robustness, and effortless data flow, it delivers distortion-free results across applications such as production monitoring, materials research, combustion studies and PIV.

Key features[1]

- **Global-shutter CMOS sensor** ensures distortion-free image capture in fast dynamic scenes, preserving accurate geometry without rolling-shutter artifacts.
- **High-resolution high-speed imaging capability** enables detailed spatial analysis of rapidly evolving processes, combining fine image detail with high temporal performance.
- **Double shutter mode** delivers two precisely timed exposures in rapid succession, supporting high-accuracy analysis of fast dynamic processes such as PIV.
- **Real-time streaming camera architecture** supports continuous image acquisition with immediate data availability, enabling long-duration measurements without limitations imposed by internal camera memory.
- **Camera Link HS**, renowned for its exceptional speed, reliability, and bandwidth, is combined with a fiber-optic link (FOL) for high-speed data transmission.

INFO This user manual covers the setup, configuration, and operation of the **pco.dimax 3.6 ST series**. For technical specifications, refer to the respective camera datasheets on our website.
The following icons are used to highlight information throughout the manual:

Icon	Meaning
	Difference between the camera variants.
	Important information to protect the camera system.
	Helpful tips on how to use the camera system.
	Additional equipment required to use the described function.
	Brief instructions on how to use pco.camware.

[1] Available features may vary by camera variant.

3 Package contents

Standard camera system

Ordering information	Camera system
85108025001	pco.dimax 3.6 ST AIR
85108025003	pco.dimax 3.6 ST WAT
85108025005	pco.dimax 3.6 DS ST AIR
85108025004	pco.dimax 3.6 DS ST WAT

When unpacking, ensure all items are present and in good condition. If anything is missing or damaged, immediately contact our customer support.

Retain the packaging box and any protective covers for future transport or storage of the system.

The following items are included in standard delivery[2]:

Item	Illustration
Camera pco.dimax 3.6 ST AIR or pco.dimax 3.6 ST WAT or pco.dimax 3.6 DS ST AIR or pco.dimax 3.6 DS ST WAT	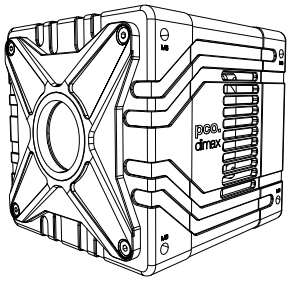
Lens mount adapter **(on camera installed)** F-mount	
Lens mount adapter **(on camera installed)** F-mount cover	
Lens mount adapter C-mount	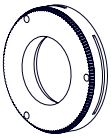
Lens mount adapter C-mount cover	

Continued on next page

[2]The illustrations are provided to assist in identifying the items. They are not to scale.

Continued from previous page

Item	Illustration
Frame grabber card (2x) CLHS compatible (SFP+ modules included)	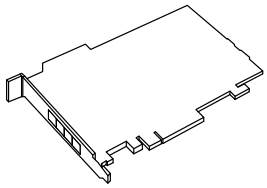
Data cable (2x) FOL cable (pink, 10 m)	
Power supply 24V / 160W	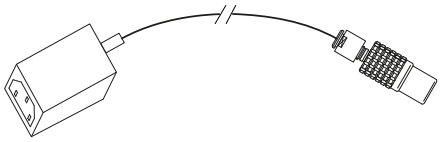
Power cable EU	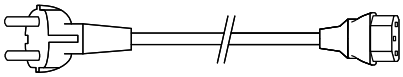
Power cable USA	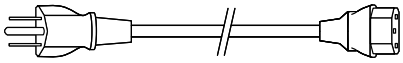
Transport Handle (screws included)	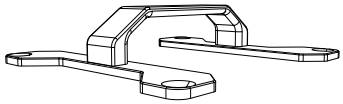
QR code card camera control software interface driver web support form	Links to: pco.camware pco.driver customer support

Download all pco.software products from our website free of charge.

Optional Accessories

The following accessories are compatible with the system and can be purchased separately:

Item	Illustration	Article number
Lens mount adapter TFL-mount + cover	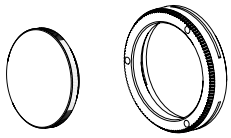	30109000070
Lens mount adapter EF-mount + cover	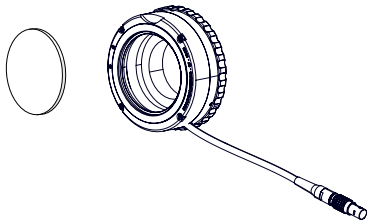	30108025020
Coaxial cable SMA - BNC	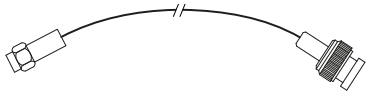	10307000116
Data cable FOL cable (pink, 5 m)		20307500840
Data cable FOL cable (pink, 20 m)		20307500845
Liquid cooling system pco.aquamatic III includes: cooler unit flexible tube (2x) coolant power supply	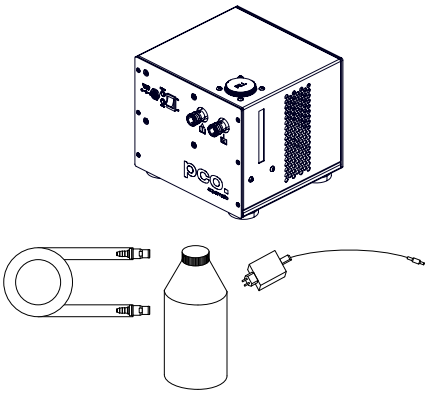	85108000245
Recorder pco.hsr 8x25 CLHS	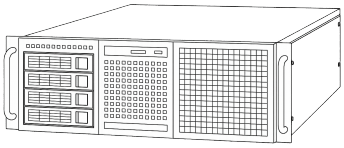	85108002000

If you have any questions or special requests, visit our website and feel free to contact us.

4 Quick Start Guide

For your first images, choose a compatible lens and an object that is visible under normal light conditions as well as easy to focus on.

Required setup

Your computer:

- is equipped with all provided **frame grabbers** (CLHS interface),
- has the latest version of **pco.camware** (or pco.vision™),
- has the latest version of the correct **PCO Driver** installed.

Your camera:

- is powered by the provided power supply and power cable,
- is connected to the computer via all provided FOL cables.

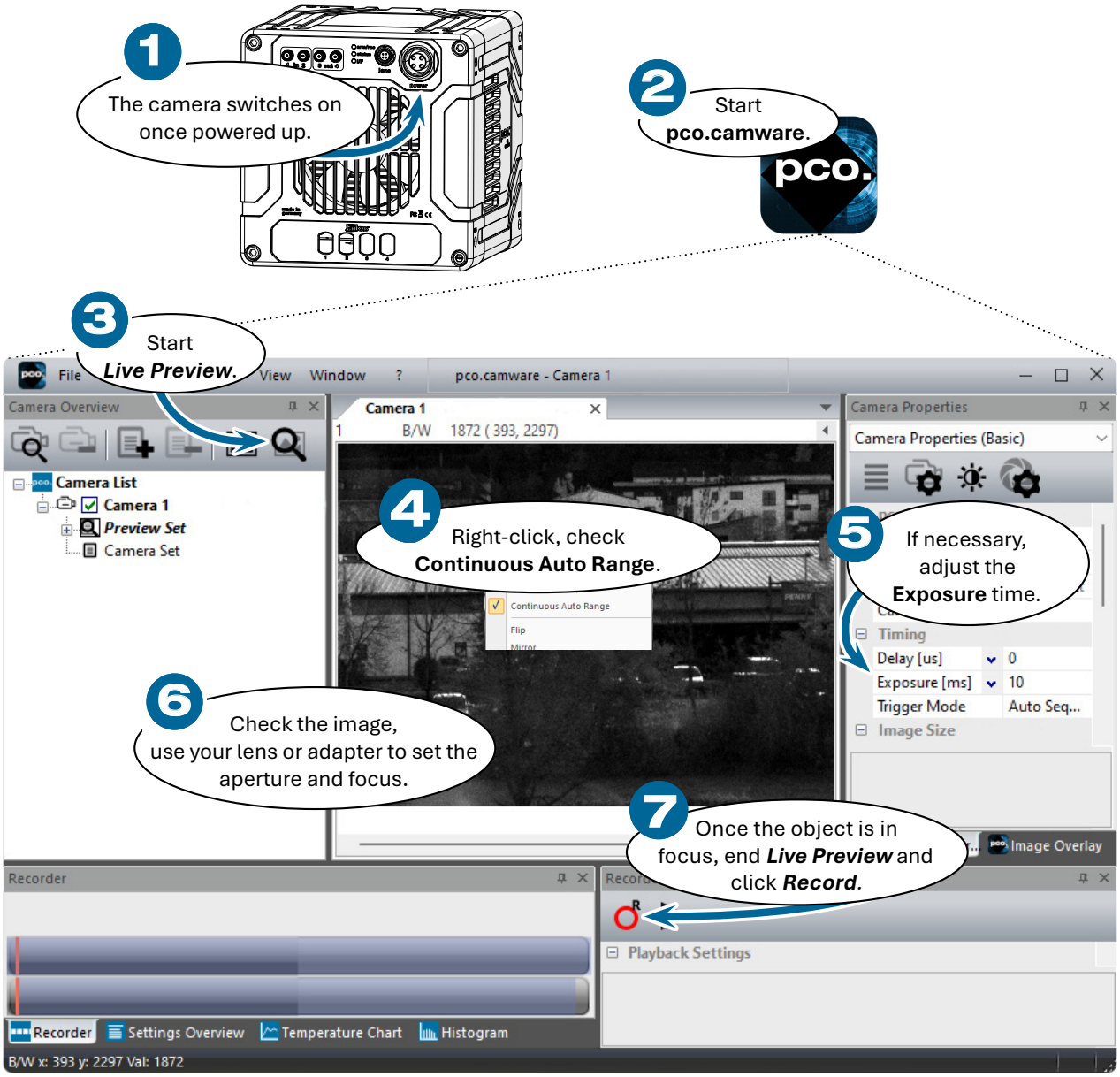

5 Camera overview

5.1 Camera (air-cooled) components

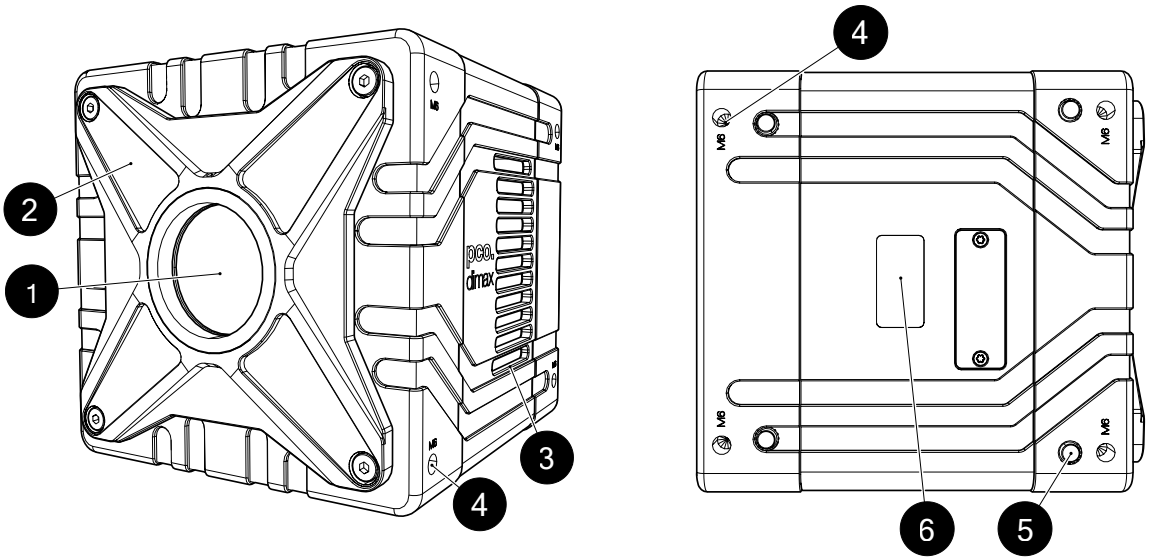

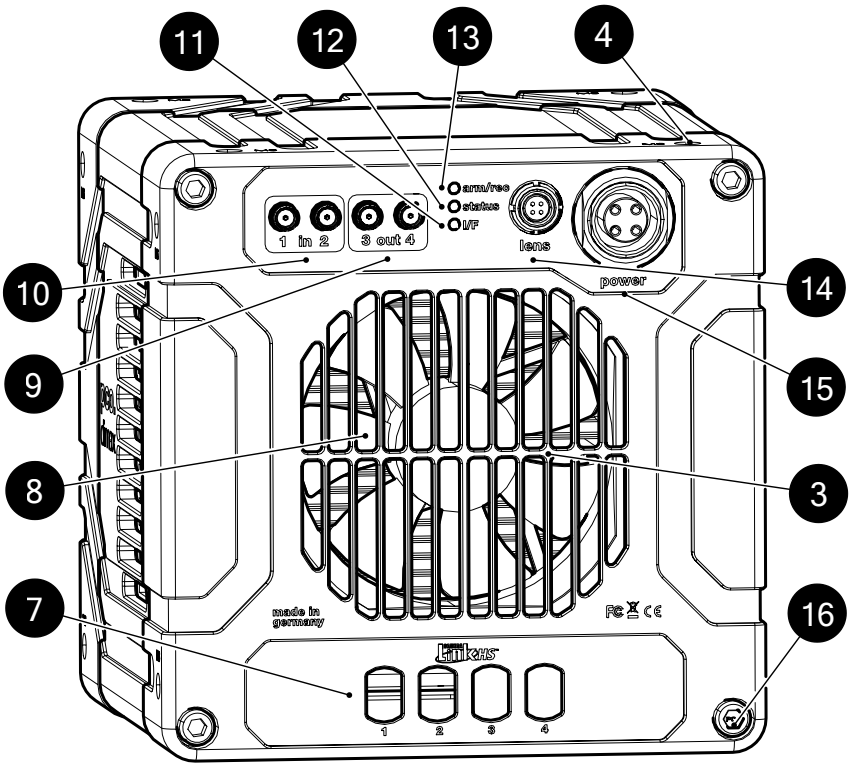

1 input window	5 rubber foot	9 SMA output connectors	13 LED ”arm/rec”
2 camera flange	6 serial number label	10 SMA input connectors	14 lens control port
3 air vents	7 data ports (CLHS)	11 LED ”I/F”	15 power port
4 mounting threads	8 cooling fan	12 LED ”status”	16 tamper seal

5.2 Camera (liquid-cooled) components

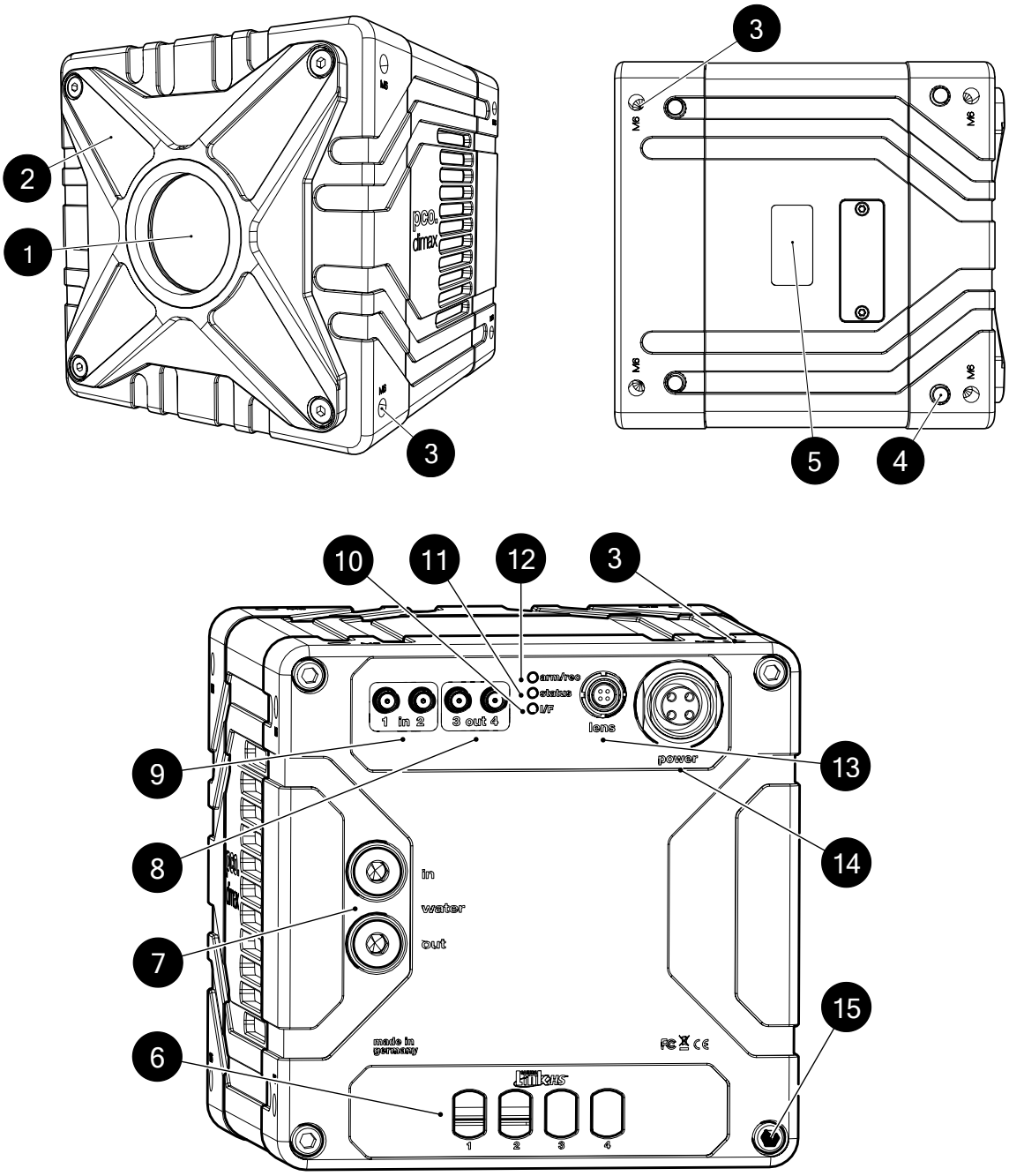

1 input window
2 camera flange
3 mounting threads
4 rubber foot
5 serial number label
6 data ports (CLHS)
7 coolant ports
8 SMA output connectors
9 SMA input connectors
10 LED ”I/F”
11 LED ”status”
12 LED ”arm/rec”
13 lens control port
14 power port
15 tamper seal

5.3 Ports, connectors and cables

Ports and connectors:

All electrical ports and connectors as well as the coolant ports[3] are located on the rear panel of the camera.

Type	Description
Data	Camera Link HS (F3, 4x4, S10)
Power	LEMO ECG.3B.304.CLL (4-pin)
SMA (input/output)	jack, 50 Ω, straight panel mount, DC-6 GHz, gold-plated
Lens control[4]	LEMO EGG.0B.304 (4-pin)
Coolant[3]	G 1/8 thread (6H, 7 mm depth)

Cables:

The standard camera system includes a power supply, two power cables, and two FOL cables for data transfer.
Optionally, add one to four coaxial cables for status or trigger functionality, depending on the setup.

Type of cable	Length	Description
Data cable (2x)	10 m	FOL MTP/LC (Female B/4X) BREAKOUT OM4
Power supply	1.0 m	IEC 60320 C14 to LEMO FGG.3B.304.CLAD72 ZN (4-pin) Input: 100 - 240 VAC Output: 24 VDC, 6.6 A, 160 W
Power cable (EU)	2.0 m	Type F (Schuko) to IEC 60320 C13
Power cable (US)	2.0 m	Type B (NEMA 5-15 P) to IEC 60320 C13
Coaxial cable	0.3 m	SMA (plug, 50 Ω, straight connector, DC-6 GHz, gold-plated) to BNC (jack, 50 Ω, straight connector, DC-6 GHz, nickel-plated)

NOTICE: Note that other cables may not be suitable for the camera system. If other cables are used, full functionality and regulatory compliance cannot be guaranteed.

5.4 Input/Output signal specifications

The camera is equipped with four SMA connectors, two of them designated for input signals and two for output signals:

Connector	Input/Output	Signal	Sensitivity type
SMA 1	input	exposure trigger	edge
SMA 2	input	acquire enable sequence trigger	level edge
SMA 3	output	status	level
SMA 4	output	status	level

[3] Only installed on liquid-cooled variants.
[4] To be used with the pco.lens adapter EF-mount.

The input signals need to meet the following electrical requirements:

Input	Requirements
Type	digital
Level	3.3 V LVTTL (5 V tolerance)
Coupling	DC
Impedance	1 kΩ
Slew rate	>1 V/ms

The output signals have the following electrical properties:

Output	Properties
Type	digital
Level	3.3 V LVTTL
Coupling	DC

5.5 Lens mount adapter system

Our cameras are equipped with the camera flange as interchangeable lens mount adapter system. With the camera flange and our lens mount adapters the cameras can be used with a wide range of standard lenses.

NOTICE: Dust particles can damage the camera sensor's input window. When changing lens mount adapters, work in a clean environment and ensure not to touch the input window.

Use our free online tool **MachVis™ Lens Selector** to find a suitable lens for your camera system.

5.5.1 How to switch to C-mount/TFL-mount

For standard delivery the camera is equipped with an F-mount adapter. To attach a C-mount lens, observe the following steps to switch from the F-mount adapter to the C-mount adapter.

For TFL-mount lenses follow the same steps to switch to the TFL-mount adapter.

NOTICE: Dust particles can damage the camera sensor's input window. When changing lens mount adapters, work in a clean environment and ensure not to touch the input window.

NOTICE: Using too much force may damage the setscrews. To secure the adapter, apply a maximum torque of 0.8 Nm. Keep the front of the camera turned sideways or down when securing the adapter to prevent dust particles from falling onto the input window.

1 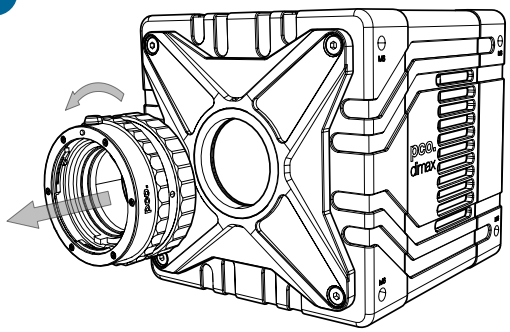 Turn the F-mount adapter counterclockwise to loosen it.	2 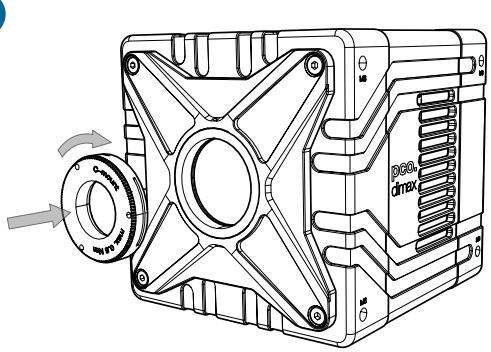 Turn the C-mount adapter clockwise and screw it in gently until it sits snugly.
3 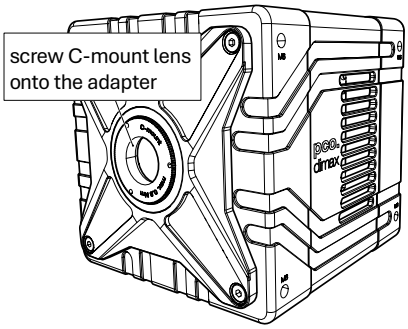 Screw a C-mount lens onto the adapter and perform the **fine focal adjustment** to set the flange focal distance to 17.526 mm.	4 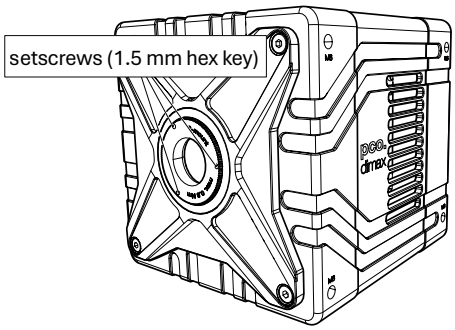 Hold the adapter in place and secure it with the three setscrews and a 1.5 mm hex key.

Keep in mind that C-mount lenses might cause vignetting in full-resolution images. To avoid vignetting with a C-mount lens, use the **Region of Interest (ROI)** function to limit the resolution.

5.5.2 How to switch to F-mount/EF-mount

To use an F-mount lens, observe the following steps to switch from the C-mount/TFL-mount adapter to the F-mount adapter.

Follow the same steps to switch to the EF-mount adapter.

NOTICE: Dust particles can damage the camera sensor's input window. When changing lens mount adapters, work in a clean environment and ensure not to touch the input window.

1 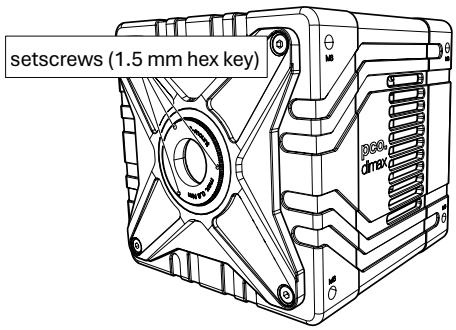 Use a 1.5 mm hex key to loosen the setscrews.	2 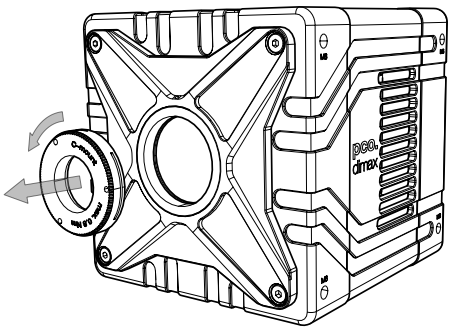 Turn the C-mount adapter counterclockwise to take it off.
3 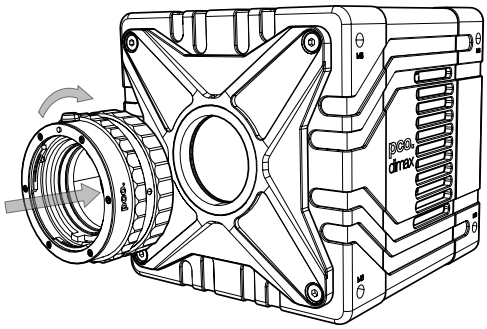 Turn the F-mount adapter clockwise and screw it in gently until it sits snugly.	4 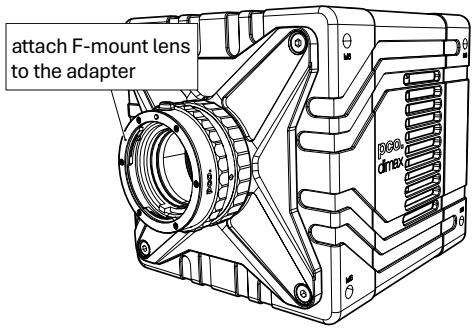 Attach an F-mount lens to the adapter and perform the **fine focal adjustment** to set the flange focal distance to 46.5 mm.

Our F-mount adapter supports lenses with automatic diaphragm, allowing you to set the aperture using the adapter's aperture ring. F-mount lenses without an automatic diaphragm can still be mounted, but their aperture cannot be controlled via the adapter and must be set manually on the lens.

5.5.3 How to perform fine focal adjustment

For the fine focal adjustment of any of the lens mount adapters, use compatible lenses with a large aperture.

To adjust the **EF-mount adapter**, connect the cable to the lens control port and follow along via software using the **Lens Control** option.

Follow these steps:

1. Screw a lens with a large aperture onto the adapter, turning it clockwise.
2. Follow the **Quick Start Guide** to see an image.
3. Set the lens focus to infinity.
4. Point the camera at a distant object.

   Rule of thumb: The distance to the object must be at least 200 times the focal length of the lens. The further away, the better.
5. Adjust the adapter until the object is in focus.
6. Set the lens focus to minimum working distance (opposite to infinity).
7. Point the camera at an object placed at the minimum working distance.
8. Adjust the adapter until the object is in focus.
9. Repeat steps 3 - 8 until the focus is consistently sharp in both positions.

5.6 Camera mounting

To reduce vibrations when placed on a flat surface, the camera is equipped with rubber feet. Additionally, there are several options to mount the camera. Ensure the camera is mounted firmly to prevent vibrations from affecting image quality.

NOTICE: Dropping the camera may damage the camera housing or internal components. When mounting the camera, make sure it is mounted securely. If the camera has been dropped, disconnect it from power and contact customer support.

When designing a mounting device, keep the camera's weight and dimensions in mind. For more information, refer to the camera's datasheet and download the supporting drawings from our **MachVis™ Lens Selector**.

The camera housing includes several attachment points on the bottom, top, both sides, and front, offering flexibility for accommodating customer-designed mounting solutions. It is recommended to use at least four attachment points to stabilize the camera.

NOTICE: Overtightening the screws when mounting the camera can cause damage. The maximum recommended torque is 3.8 Nm for the M6 threads and 2.2 Nm for the M5 threads.

There are four **M6 threads** located on the bottom 1, the top 2, and on each side 3 4 of the camera housing.

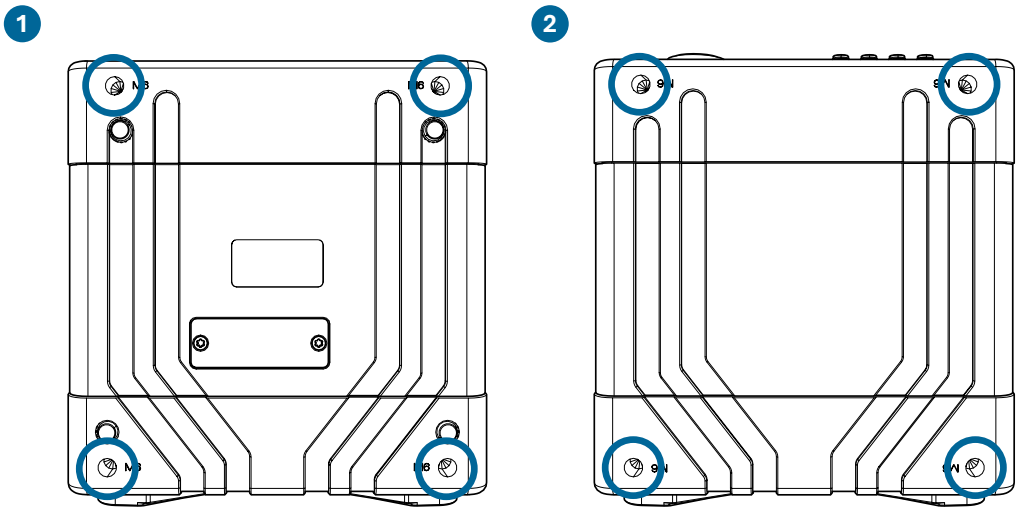

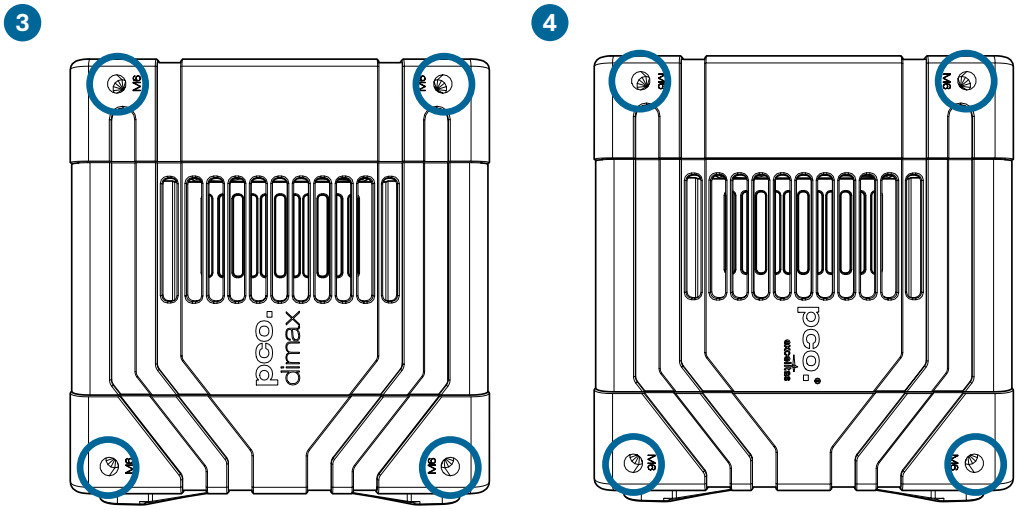

Front (Direct) mounting:

There are four M5 threads located at the front of the housing, usually used to attach the camera flange to the camera. The camera flange is detachable and the four threads may be used to secure the camera directly (without a lens or lens mount adapter) to a mounting device.

By direct mounting you can make use of the minimum distance between the camera's housing and its focal plane.

NOTICE: Dust particles can damage the camera sensor's input window. When taking off the camera flange, work in a clean environment and make sure not to touch the input window.

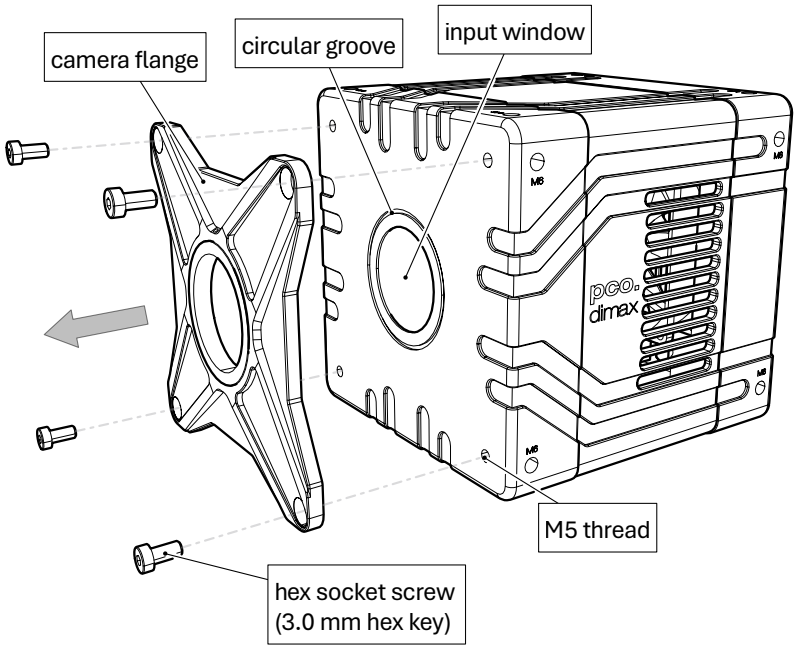

Follow these steps:

1. Remove the lens, lens mount adapter and camera flange.
2. Seal the circular groove with an O-ring or design the mounting device to block any parasitic light.
3. Secure the camera to the mounting device by using the M5 threads.

5.7 Transport handle

A robust camera handle is included as part of the camera system. This handle is designed to be mounted directly onto the camera housing to support safe and comfortable handling during setup, transport, and operation.

NOTICE: Dropping the camera may damage the camera housing or internal components. When lifting or carrying the camera, be aware of its weight and ensure a secure grip. If the camera has been dropped, disconnect it from power and contact customer support.

Install the handle using the provided screws and the designated mounting threads at the top of the camera housing, and ensure that all screws are securely tightened before use.

NOTICE: Overtightening the screws when installing the handle can cause damage. The maximum recommended torque for the M6 threads is 3.8 Nm.

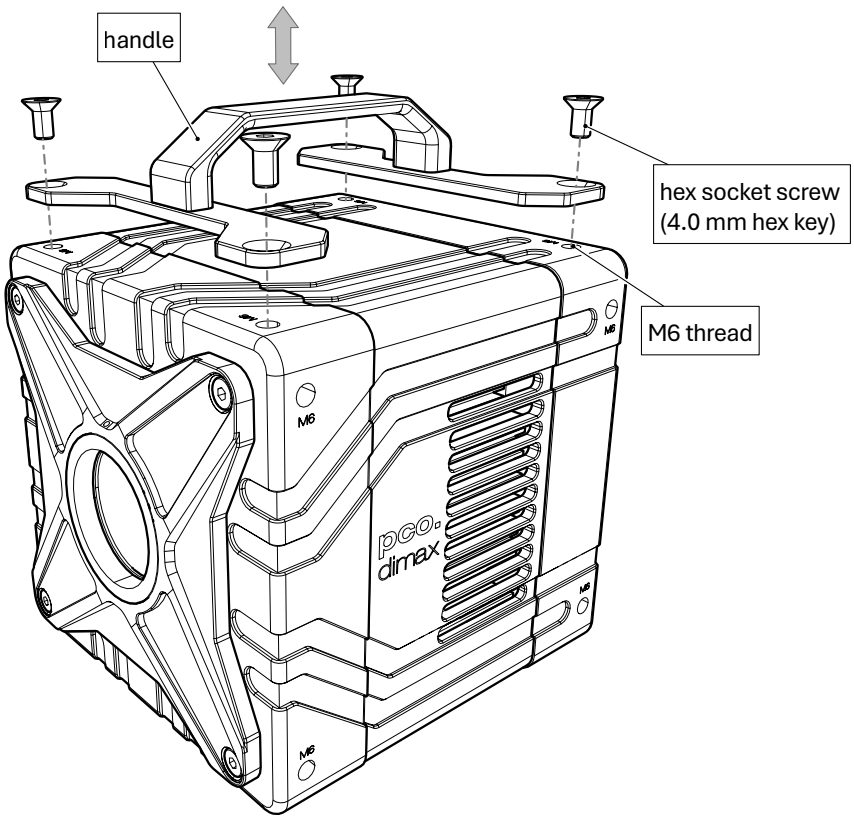

6 Setup and configuration

This chapter explains the minimum requirements for a computer to operate the camera, how to setup the hardware, and the available software options for camera control.

6.1 System requirements

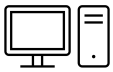

These are the minimum requirements for a computer to facilitate installation, smooth operation, and performance of the camera system:

System components	Minimum requirements
OS (64-bit)[a]	Windows 10 or later Ubuntu 20.04 or 22.04 Debian 11 or 12 RHEL 8 or 9 Rocky Linux 8 or 9
CPU	Intel Xeon (8core, 4.3 GHz)
RAM	$\geq$ 32 GB
Storage	$\geq$ 500 GB (SSD; NVMe)
GPU	Nvidia (CC $\geq$ 8.9; VRAM $\geq$ 12 GB)
Display	Full-HD resolution display
PCIe slots	2 Gen3 slots (1x8, 1x16)

[a] Not all products in our software suite are compatible with every operating system listed.

We recommend to use only currently supported operating systems.

Download the latest versions of our pco.software and camera drivers from our website.

6.2 Frame grabber

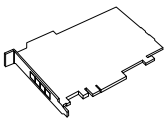

Two CLHS-compatible frame grabber cards are included on delivery as part of the camera system. These cards are to be used to establish the CLHS connection for data transfer between the computer and the camera. Download and install the PCO CLHS driver from our website to use the frame grabbers with the camera.

Follow the installation guidance in our pco.driver manual and any information given by the manufacturer.

6.3 Cooling system

Depending on the camera variant, the camera is cooled either by forced air or by an external liquid cooling system.

Keep ambient temperature stable for optimal performance.

6.3.1 Forced-air cooling

Note:
only applicable to air-cooled variants

The cooling fan turns on automatically when the camera is powered on. Air vents are located at both sides of the housing, enabling airflow to the fan at the rear. To ensure a constant operating temperature, the camera needs a sufficient supply of fresh air.

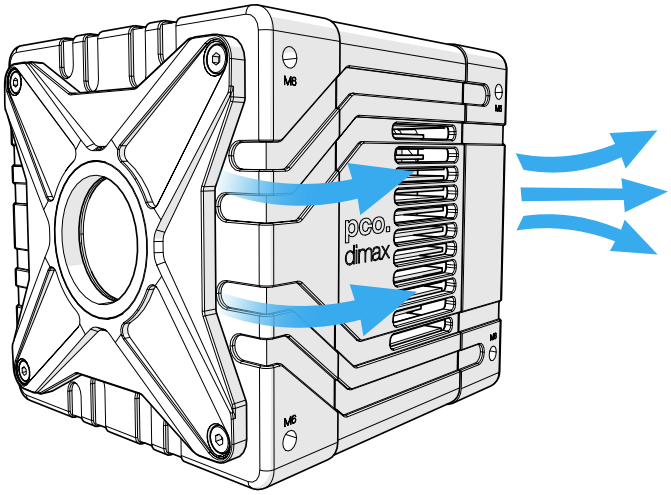

NOTICE: Do not obstruct the air vents or the fan of the camera. To ensure adequate airflow, allow sufficient clearance around all the air vents. Prolonged exposure to excessive heat or inadequate ventilation can wear out components, leading to more frequent repairs or even replacement.

6.3.2 Liquid cooling

Note:
only applicable to liquid-cooled variants

Additional equipment required:
An external liquid cooling system is required. We recommend the use of the pco.aquamatic III, on which our cameras have been tested.

NOTICE: Using coolant below the ambient dew point temperature may cause water condensation, risking damage to electronics and image quality. Always maintain coolant temperatures as specified by the manufacturer and consider ambient conditions to prevent condensation.

Set up and connect the liquid cooling system before powering up the camera.

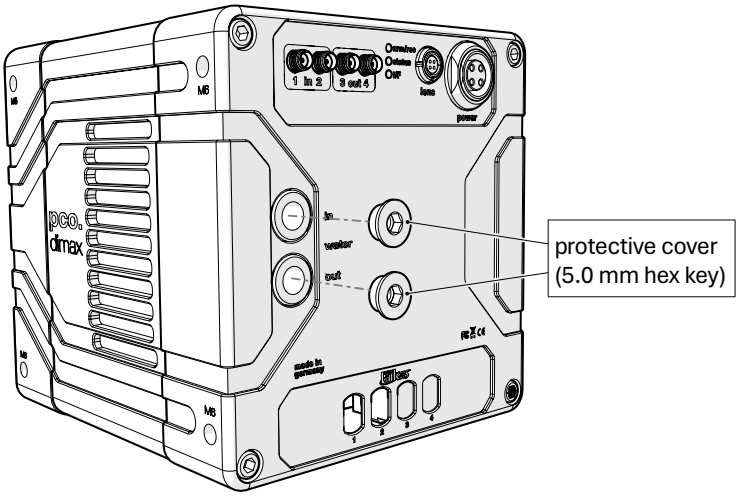

Follow these steps:

1. Set up the liquid cooling system according to the instructions in its manual.
2. Remove the protective covers (5.0 mm hex key, counterclockwise) from the coolant ports on the rear of the camera.
3. Attach the coolant connectors to the camera housing by turning them clockwise.
4. Connect the tubes to the coolant connectors.

There is no need to disconnect the liquid cooling system after every use. For longer storage periods or when removing the external cooling system, leave the coolant connectors attached to the camera housing to prevent any residual coolant from leaking.

6.4 Hardware setup

This section explains the hardware setup to use the camera system, including the most common optional components.

NOTICE: Do not bend, kink, or sharply twist the FOL cables at any time to avoid damage and signal loss. The minimum bend radius is 7.5 mm.

NOTICE: Do not force any connectors. All connectors can be connected properly without excessive force. Improper alignment or forcing may damage the connector or the device.

These components are essential:

1. Install both **frame grabbers**.
2. Liquid-cooled variants: Connect the camera to an external liquid cooling system.
3. Power the camera via the included power supply and cable.
4. Remove any plastic covers and connect both FOL cables for data transfer:
   Align the protrusion on the single-connector end with the slot on the camera and press gently until it clicks. Connect all four lane pairs on the multi-connector end to the frame grabber. Repeat with the second cable.

These components are optional, adjust the order depending on the individual setup:

5. Attach a coaxial cable for signal input to one or both SMA input connectors.
6. Attach a coaxial cable for status signal output to one or both SMA output connectors.
7. Connect the pco.lens adapter EF-mount to the lens control port for remote lens control.

Example setup:

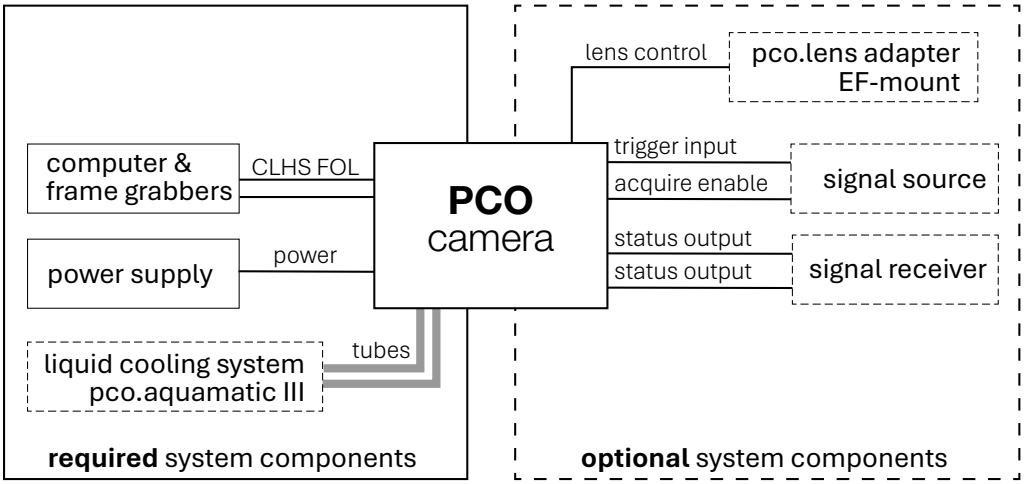

6.5 Software options

This section provides an overview of the available software needed to control the camera. In addition to our GUI-based camera control software, **pco.camware** and **pco.vision**™, we offer both **software development kits** and third-party **application integrations** to address the full range of user needs.

All pco.software products are available on our website free of charge.

Unless otherwise stated, all software-related instructions and explanations in this manual pertain to the GUI software **pco.camware**, which is used for demonstration purposes due to its broad applicability and ease of use.

6.5.1 PCO user interface software

Our graphical user interface (GUI) camera control applications, **pco.camware** (Windows) and **pco.vision** (Linux/Windows), are suitable for all our camera systems. We recommend using them for initial setup and to become familiar with the camera.

These applications enable control of most camera settings and facilitate image acquisition and storage. You can tailor them to your needs by choosing from different layouts, styles, and features.

Download the latest version from our website and follow the installation guide in the respective software manual.
⟶ During installation, when the window **Choose Components** appears, make sure **Camera Link HS DLL (CLHS)** is checked.

6.5.2 PCO software development kits

PCO offers software development kits (SDK) for a wide range of different programming languages to be used for customized applications. They are compatible with Windows and Linux platforms.

We feature the high-level SDKs **pco.cpp**, **pco.python**, and **pco.csharp** for C++, Python, and C# applications, respectively. To control the camera in MATLAB, LabVIEW, and Java, use **pco.matlab**, **pco.labview**, and **pco.java**.
For users requiring a low-level C interface, we also provide the general SDKs, **pco.sdk** and **pco.recorder**.

More detailed information can be found on our website.
Visit our GitHub repositories for example projects.

6.5.3 Application integrations

In case you are already used to a different software, PCO cameras are also integrated in a variety of widely used third-party applications.

We provide and manage the **PCO µManager Integration**, which allows for camera control directly in µManager.

Other integrations are developed and maintained by third-party software providers.

7 Operation modes

This chapter provides a detailed overview of the camera's functions and features, outlining the various operation modes.

If not stated otherwise, all settings are available in **pco.camware**. The pco.camware logo indicates short instructions on how to use the respective settings in the application. For detailed instructions, refer to the pco.camware user manual.

7.1 Basic operation

This section covers the basic operation of the camera, including switching it on or off, understanding the provided LED signals, and how to set the exposure time for image acquisition.

Follow the **Quick Start Guide** to capture your first images.

7.1.1 Switching the camera on/off

After the hardware setup is finished and the camera is powered up, it is ready for use.

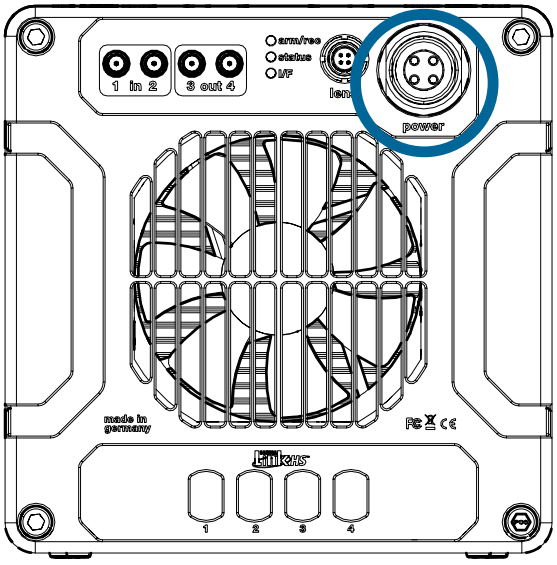

1. The camera[5] turns on automatically as soon as it is powered up.
2. To turn off the camera, disconnect it from power.

[5] Air-cooled variant shown; other variants may differ in appearance only.

7.1.2 LED signals and their meanings

The camera is equipped with three LEDs, labeled ”status”, ”arm/rec” and ”I/F”. These LEDs are located on the rear panel of the camera and provide information about the state of the camera.

For light-sensitive environments the LED lights can be switched off via software. However, as these signals give important information, they should be switched on to check the state of the camera if issues arise.

LED ”status”

This LED indicates the general state of the camera. It displays three colors, which have the following meanings:

Color	Meaning
(off)	camera is without power / switched off
orange	camera is booting
green	camera is ready for use
red	error (see the **Troubleshooting chapter**)

LED ”arm/rec”

This LED only lights up when the status of the camera is ”ready for use” (green light LED ”status”). When the status is different, the LED ”arm/rec” is off. It is capable of displaying orange, either solid or blinking, with the following meanings:

Signal	Meaning
(off)	camera is disarmed
solid orange	camera is armed/ready to record
blinking orange	camera is recording

LED "I/F"

This LED provides information about the status of the camera's CLHS connection. It is capable of displaying two colors, which have the following meanings:

Signal	Meaning
(off)	camera is without power / switched off
solid green	camera has established a CLHS connection
blinking green	camera is physically connected to frame grabber, but no CLHS connection is established
red	camera is not physically connected to frame grabber, no CLHS connection is established

7.1.3 Setting the exposure time

Set the exposure time via software. If the image is too bright, decrease it. If the image is too dark, increase it.

Keep in mind that longer exposure times may affect the frame rate.

Because the exposure duration depends on the camera's internal timing constraints, it can only be adjusted in fixed, predefined steps:

Camera	Exposure time range	Step size
pco.dimax 3.6 ST	9 µs - 1 s	2 µs
pco.dimax 3.6 DS ST	9 µs - 1 s	2 µs

Adding delay

For precise synchronization with external devices, there is the option to add delay before the exposure of each frame. Delay may be added in predefined steps. Adding delay will reduce the frame rate.

Camera	Delay time range	Step size
pco.dimax 3.6 ST	0 - 1 s	2 µs
pco.dimax 3.6 DS ST	0 - 1 s	2 µs

pco.camware:
Set the exposure time in nanoseconds, microseconds or milliseconds. The software automatically adjusts the time to the nearest supported timing increment. It may be adjusted during recording.

7.2 Defining Regions of Interest (ROI)

A Region of Interest (ROI) limits readout to a specific part of the sensor, reducing image resolution and possibly affecting the frame rate. This saves processing time and resources by focusing only on the relevant area. Using an ROI improves efficiency and accuracy in tasks like detection, measurement, and monitoring.

The ROI can be adjusted vertically, horizontally, or in both directions, using predefined step sizes:

Vertical ROI (step size 8 rows, symmetrical)**:**
Setting a vertical ROI speeds up frame rate and reduces the amount of image data.

Horizontal ROI (step size 64 columns)**:**
Setting a horizontal ROI reduces the amount of image data, it does not affect frame rate.

pco.camware:
Select the intended values for each side (Left, Right, Top, and Bottom) of the sensor in the ROI section.

7.3 Applying binning

Binning combines adjacent pixels (horizontally, vertically, or both) to form super-pixels. This process improves the signal-to-noise ratio (SNR) by increasing the overall signal, which is useful to enhance image quality in low-light conditions. At the same time the image's spatial resolution is reduced. Note that since binning is performed digitally after signal readout, readout noise will not be reduced.

This camera supports binning for 2 pixels horizontally, vertically, or in both directions. The two most common types can be applied:

Sum binning:
The process of combining the values of the adjacent pixels by adding them together.

Average binning:
The process of combining adjacent pixels by calculating their average value.

pco.camware:
Select the intended binning mode Sum or Average and specify the number of pixels to combine horizontally and/or vertically in the Binning section.

7.4 Using lens control

Requires optional accessory:
The lens control function requires the pco.lens adapter EF-mount and a compatible lens.

If access to the camera is difficult, this camera supports remote lens control for electronic lenses when using the pco.lens adapter EF-mount.

Follow these steps:

1. Attach the pco.lens adapter EF-mount and a compatible lens to the camera. Position the cable upward.
2. Connect the cable of the pco.lens adapter EF-mount to the lens control port at the rear of the camera.
3. Adjust aperture and focus via software.

pco.camware:
Open the Lens Control Dialog and adjust aperture and focus by using the sliders.

7.5 Selecting a gain mode

The gain mode determines how strongly the camera amplifies the sensor signal before digitization. This camera offers two gain configurations, designed to balance signal visibility and dynamic range to optimize image quality for different illumination levels and application requirements.

- **Low-gain mode (70 e^-/DN):** maintains the full dynamic range of the sensor and stable signal characteristics, making it well-suited for brightly illuminated scenes and applications with high contrast.
- **High-gain mode (10 e^-/DN):** increases signal amplification, enhancing the visibility of low-signal details during short exposure times or in low-light conditions.

pco.camware:
In Camera Properties (Expert) -> Sensor Control.
Select the gain mode by choosing the corresponding value for Conversion Factor.

7.6 Choosing a shutter mode

The camera is equipped with a global shutter sensor. Additionally, there is a double shutter mode available[6], allowing two images to be captured in rapid succession.

For simplicity, the sensor size, indicated by the number of lines, has been limited in the timing diagrams in this chapter.

[6] Only applies to DS variants.

7.6.1 Global shutter

In general, a global shutter captures an image by exposing all lines of the sensor at the same time.

The exposure starts and ends simultaneously for all lines, and after the exposure has finished, readout is done line by line. Readout can begin only at regular intervals called the line time.

The diagram below depicts the timing characteristics of a single frame captured with the global shutter:

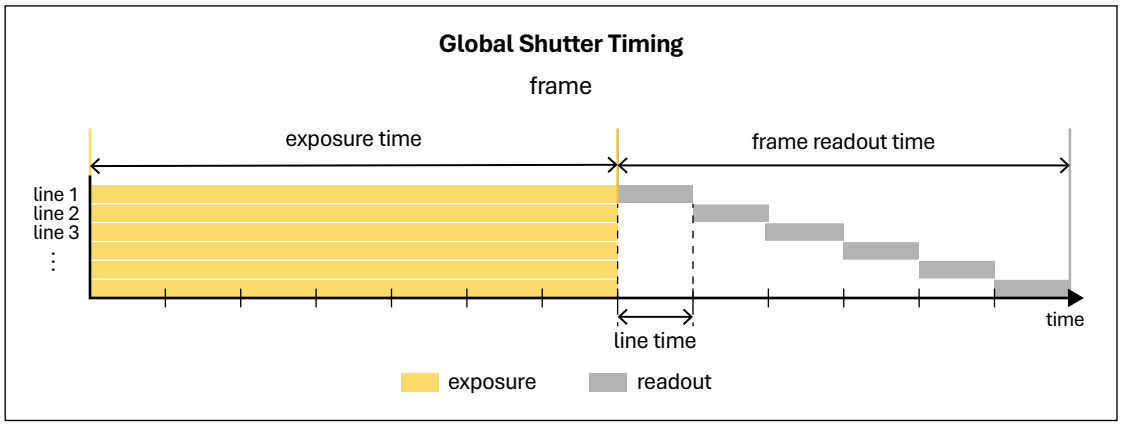

The exposure time range and the line time are fixed:

Camera	Exposure time range	Line time
pco.dimax 3.6 ST	9 µs - 1 s	2 µs
pco.dimax 3.6 DS ST	9 µs - 1 s	2 µs

Frame readout time

While the exposure time is set directly, the frame readout time is calculated as follows:

$$\textit{frame readout time} = \textit{line time} \times \textit{number of lines}$$

Keep in mind that setting a Region of Interest (ROI) might affect the number of lines.

Exposure while readout

Exposure while readout means that while frame (n) is still being read out, the camera can already begin exposing the next frame (n+1). This enables higher frame rates and more efficient data acquisition, which is especially relevant during continuous image acquisition.

Note that even with exposure while readout the readout process is still strictly sequential. As a result, the frame readout time defines the minimum possible frame time[7]. Depending on the configuration, the highest achievable frame rate may be limited by either the frame readout time or the exposure time.

[7] In practice, a small processing delay is added to each frame, slightly increasing the actual frame time; this delay becomes more noticeable with very small vertical ROIs.

The following diagrams depict the limiting factors during continuous acquisition, illustrating image capture timing at the highest achievable frame rate.

Exposure time < frame readout time

When the exposure time is shorter than the frame readout time, the readout time becomes the bottleneck. The frame rate does not increase even if the exposure is shortened further.

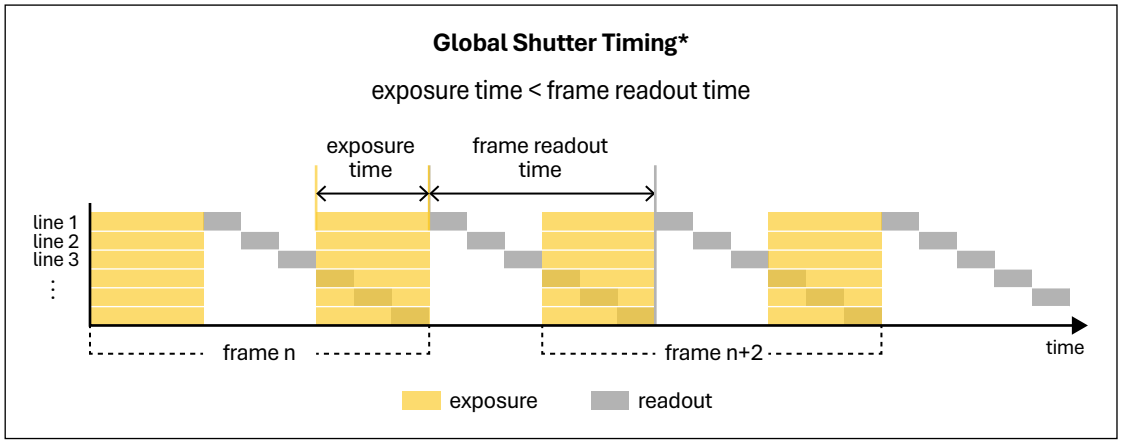

*Overlap shown only applies to models supporting exposure while readout; for other models, exposure always starts after frame readout, directly affecting the frame rate.

Exposure time > frame readout time

However, when the exposure time is longer than the frame readout time, the exposure time becomes the limiting factor. Shortening it will directly increase the frame rate.

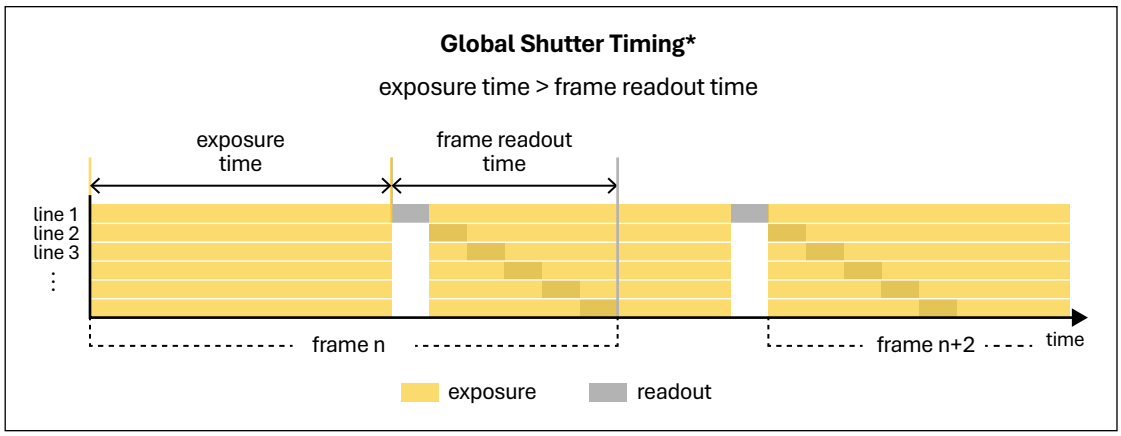

*Overlap shown only applies to models supporting exposure while readout; for other models, exposure always starts after frame readout.

Output signal for exposure timing

The camera provides an output signal, Status Exposure, which conveys information about the exposure timing.
For detailed information about this signal and its timing characteristics, please refer to the chapter **Understanding status signals** and the section **Status Exposure**.

Adding delay

For precise synchronization with external devices, there is the option to add delay before the exposure of each frame. Delay may be added in predefined steps. Adding delay will reduce the frame rate.

Camera	Delay time range	Step size
pco.dimax 3.6 ST	0 - 1 s	2 µs
pco.dimax 3.6 DS ST	0 - 1 s	2 µs

7.6.2 Double shutter

Note:
only available in the ***pco.dimax 3.6 DS ST CLHS variants***

The double shutter mode is a specialized camera function that allows two exposures in rapid succession, separated by a precisely defined, brief time interval.

This mode allows time-resolved imaging of fast transient phenomena without requiring high continuous frame rates, making it well suited for applications such as fluid dynamics and particle imaging, where accurate measurement of motion over very short time scales is required to determine particle displacement and velocity fields.

Unlike conventional single shutter operation, double shutter mode enables a single trigger signal to initiate the acquisition of two closely timed frames by overlapping the exposure and readout phase. This mode is available for the trigger modes **Auto Sequence**, **Software Trigger**, and **External Exposure Start**.

The diagram below depicts the timing characteristics of two frames captured in double shutter mode, including how the **Status Exposure** and **Status Busy** signals are displayed:

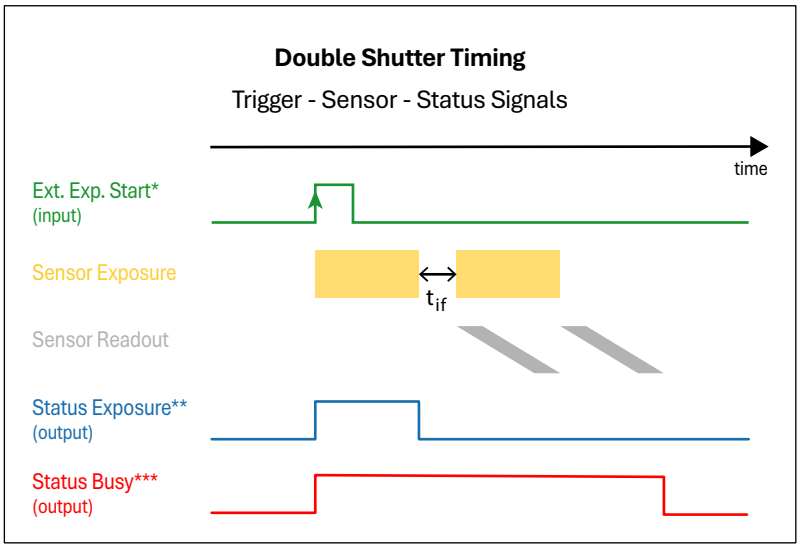

*Ext. Exp. Start is shown with signal polarity: Rising.
**Status Exposure is shown with signal polarity: High.
***Status Busy is shown with signal polarity: High.

Interframing time (t_{if})

The interframing time (t_{if}) defines the interval between the end of the first exposure and the start of the second. This interval is extremely short and inherent to the system. During this period, some photo-generated charge may not be fully recorded and could appear partially in either frame or be lost entirely.

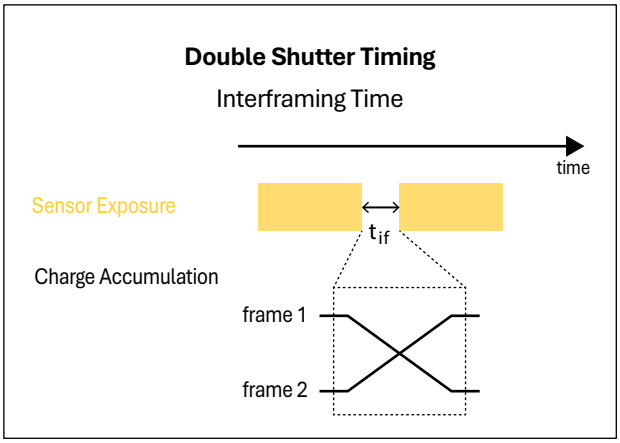

When using laser pulses, ensure that each pulse falls clearly within either the first or the second exposure phase to avoid measurement errors caused by misaligned pulses.

Setting the exposure time

The exposure time for the first frame is user-defined and set directly via software. The exposure time for the second frame is determined by the readout time of the first frame and controlled by the camera.

Timing characteristics

The following table presents the precise timing[8] in double shutter mode:

Parameter	pco.dimax 3.6 DS ST
Interframing time	250 ns
Exposure 1	9 µs - 1 s (user-defined)
Exposure 2 @ full resolution:	frame readout time 3618 µs

pco.camware:
In Camera Properties (Expert) -> Sensor Control -> Double Image choose ”On”.

[8] Values are rounded to the nearest nanosecond and to one decimal place for microseconds.

7.7 Understanding status signals

Additional equipment required:
The status signal feature requires a compatible signal receiver and a connecting cable.

The camera can output two real-time status signals, **Status Busy** and **Status Exposure**, which may be used for synchronization purposes.

Use output ports SMA 3 and SMA 4 to measure the signals. With two cables connected, the camera can send two status signals simultaneously.

Via software you can:

- switch the signals on and off,
- select the signal polarity.

7.7.1 Status Busy

This status signal indicates whether the camera is ready to accept a trigger. The active state of Status Busy shows that the camera is unable to process new trigger events.

Parameter	Value
Assigned port	SMA 3
Status	Off On
Signal polarity	High Low

Description for signal polarity 'High':

A high signal on Status Busy means no trigger can be accepted (the camera is busy), while a low signal shows that the camera can accept a new trigger.

Timing diagrams of Status Busy in combination with different trigger modes are included in the chapter **Configuring trigger modes**.

7.7.2 Status Exposure

This signal indicates the exposure phase of the sensor.

Parameter	Value
Assigned port	SMA 4
Status	Off On
Signal polarity	High Low

Description for signal polarity 'High':
A high signal on Status Exposure means the sensor is currently exposed, while a low signal shows that the sensor is not exposed.

Timing diagrams of Status Exposure in combination with different trigger modes are included in the chapter **Configuring trigger modes**.

7.7.3 Timing characteristics

After the camera receives a trigger signal, there is a short processing delay before the signals for Status Busy and Status Exposure are updated. The following timing diagram illustrates these delays, followed by a table presenting precise delay measurements[9].

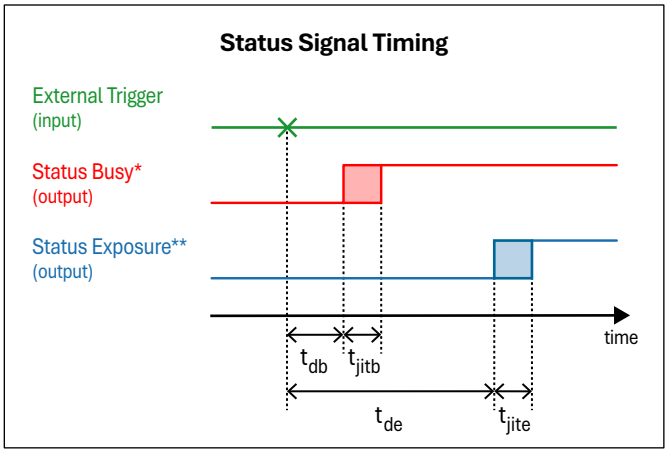

*Status Busy is shown with signal polarity: High.
**Status Exposure is shown with signal polarity: High.

Parameter	pco.dimax 3.6 ST	pco.dimax 3.6 DS ST
t_{db} (delay Status Busy)	tbd	tbd
t_{jitb} (jitter Status Busy)	tbd	tbd
t_{de} (delay Status Exposure)	tbd	tbd
t_{jite} (jitter Status Exposure)	tbd	tbd

7.8 Configuring trigger modes

The camera supports several trigger modes. You can choose between **Auto Sequence**, **Software Trigger**, **External Exposure Start**, and **External Exposure Control**. Select the trigger mode via software. The signal for external triggering is received via input port SMA 1.

Adding delay

For precise synchronization with external devices, there is the option to add delay via software before the exposure of each frame in all trigger modes but External Exposure Control. Delay may be added in predefined steps. Adding delay will reduce the frame rate.

[9] Values are rounded to the nearest nanosecond and to one decimal place for microseconds.

The diagrams shown in this chapter do not include any system delay or jitter times for either trigger or status signals, unless explicitly stated.

7.8.1 Auto Sequence

This is the default trigger mode. In this mode, image acquisition runs continuously between a start command and a stop command.
Use this mode when the focus is on capturing the maximum number of frames per second.

The camera optimizes image acquisition by computing the highest achievable frame rate based on the current configuration. When the exposure time is longer than the frame readout time, the next frame begins exposure immediately after the first line of the previous frame has been read out.[10] In this case the exposure duration is the limiting factor for achieving a high frame rate, as shown in the diagram below.

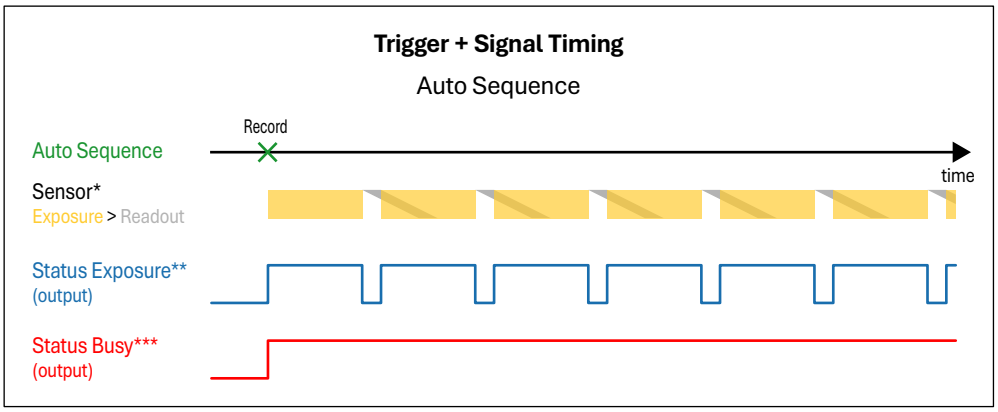

*Overlap shown only applies to models supporting exposure while readout; for other models, exposure starts after frame readout.
**Status Exposure is shown with signal polarity: High.
***Status Busy is shown with signal polarity: High.

When the exposure time is shorter than the frame readout time, the camera schedules the next exposure of the first line based on the readout timing. It is timed so precisely that when the readout of the last line of one frame finishes, it immediately continues with the readout of the first line of the next frame. The result is a seamless transition between the readout of two consecutive frames, making the frame readout time the limiting factor for a high frame rate, as illustrated in the following diagram.[10]

[10] Only applies for models supporting exposure while readout; for other models, exposure is calculated to start directly after frame readout.

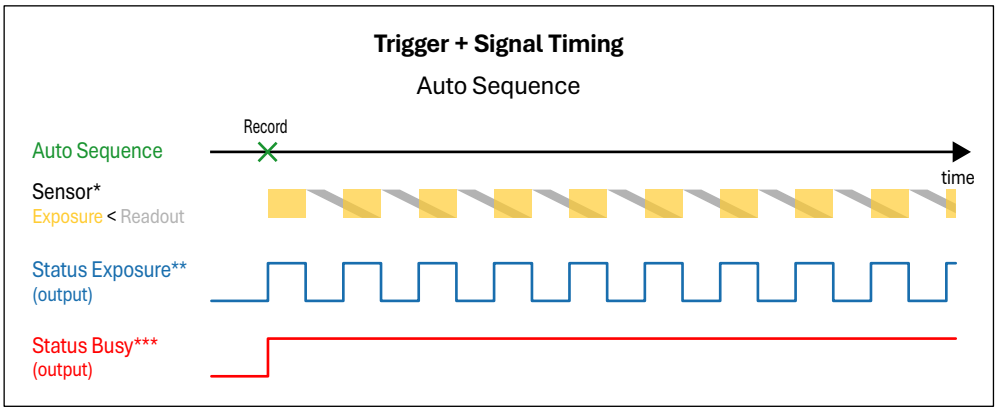

*Overlap shown only applies to models supporting exposure while readout; for other models, exposure starts after frame readout.
**Status Exposure is shown with signal polarity: High.
***Status Busy is shown with signal polarity: High.

pco.camware:
Choose Trigger Mode **Auto Sequence**.
Click 'Record' and continuous image acquisition starts.

7.8.2 Software Trigger

This trigger mode is for the acquisition of single images via software command. Its focus is on capturing a specific event on demand.
Use this mode for low-frequency image acquisition of static objects, where precise timing is not critical.

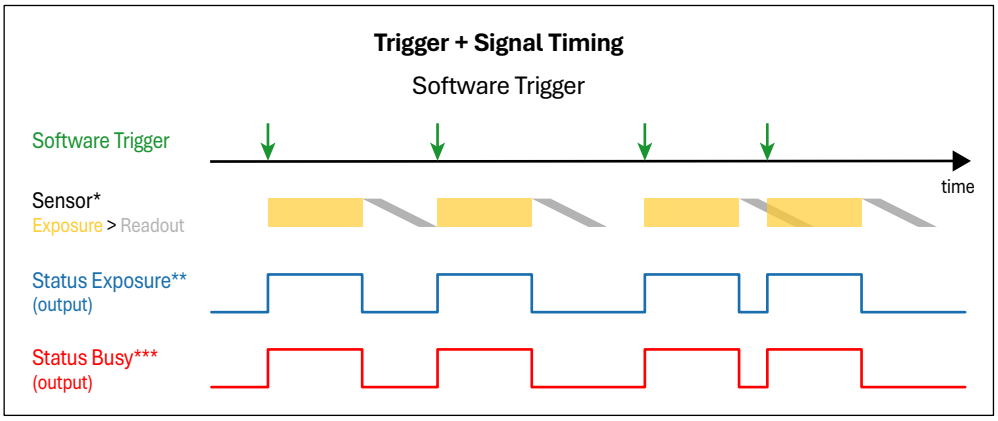

*Overlap shown only applies to models supporting exposure while readout; for other models, exposure starts after frame readout.
**Status Exposure is shown with signal polarity: High.
***Status Busy is shown with signal polarity: High.

pco.camware:
Select Trigger Mode **Soft Trigger**.
Click 'Record' and the 'Trigger' button appears next to it.
With every click on 'Trigger' a single image is captured.

7.8.3 External Exposure Start

Additional equipment required:
This mode requires an external trigger source and a connecting cable.

In External Exposure Start, each exposure is initiated by an external trigger signal.
Use this mode for precise timing of image capture and to synchronize the camera with external devices.

Parameter	Value
Assigned port	SMA 1
Status	Off On
Signal polarity	Rising Falling

Due to the readout of the sensor, exposure only starts at specific times determined by line timing. The exact timing is explained in the section **Timing characteristics** below.

By default, each rising edge of the signal triggers the capture of a single image. The signal frequency directly determines the frame rate. Without a trigger, no image is acquired.

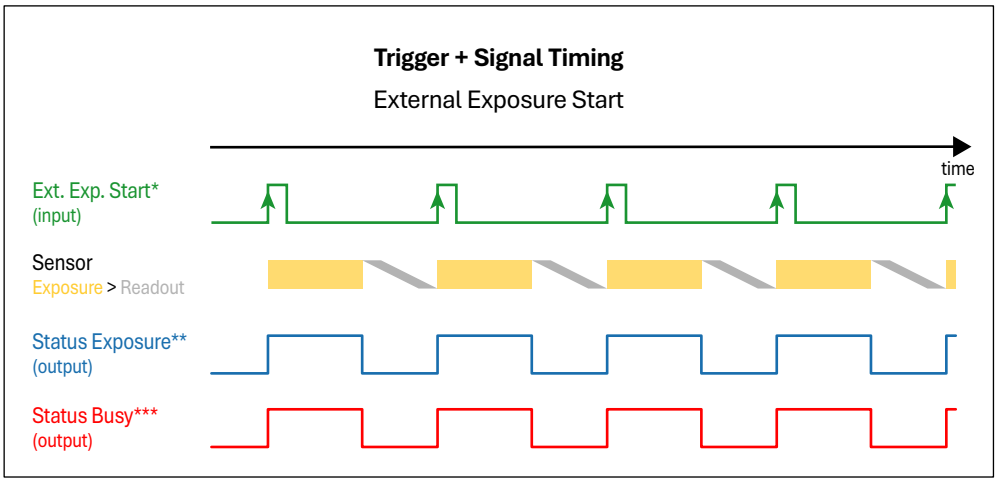

*Ext. Exp. Start is shown with signal polarity: Rising.
**Status Exposure is shown with signal polarity: High.
***Status Busy is shown with signal polarity: High.

The possible frame rate is limited by sensor exposure, readout, and processing time, depending on the current configuration. In the External Exposure Start trigger mode, trigger events can be accepted during readout[11], as indicated by the Status Busy signal. If trigger pulses exceed the camera's capacity, some may be missed, resulting in fewer images captured than expected from the signal frequency.

[11] Only applies to models supporting exposure while readout.

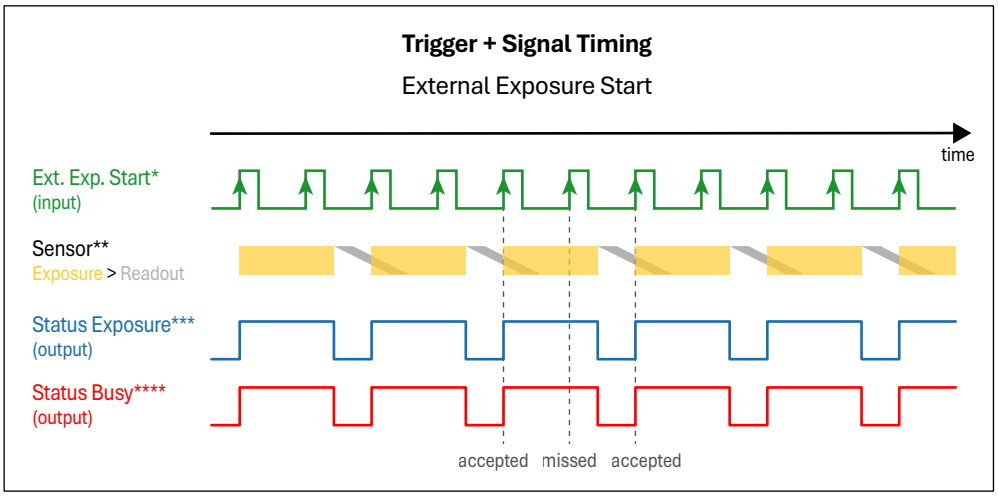

*Ext. Exp. Start is shown with signal polarity: Rising.
**Overlap shown only applies to models supporting exposure while readout; for other models, exposure starts after frame readout.
***Status Exposure is shown with signal polarity: High.
****Status Busy is shown with signal polarity: High.

If the external trigger input rate is too close to the maximum frame rate, it becomes unpredictable whether a trigger is accepted or missed. Check the Status Busy signal to confirm that the camera can accept a new trigger.

Timing characteristics

After the camera receives the external trigger signal, there is a short processing delay before the sensor is exposed. The following timing diagram illustrates this delay, followed by a table presenting precise delay measurements[12].

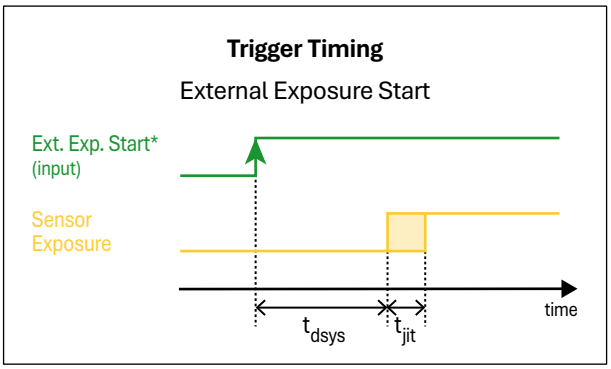

*Ext. Exp. Start is shown with signal polarity: Rising.

Parameter	pco.dimax 3.6 ST	pco.dimax 3.6 DS ST
t_{dsys} (system delay)	tbd	tbd
t_{jit} (jitter)	tbd	tbd

pco.camware:
In Camera Properties (Expert) -> Hardware I/O Control -> Exposure Trigger choose ”On”.
Select Trigger Mode **Ext. Exp. Start**.
Click ’Record’ and trigger from external source.

[12]Values are rounded to one decimal place.

7.8.4 External Exposure Control

Additional equipment required:
This mode requires an external trigger source and a connecting cable.

In External Exposure Control, both the start and duration of each exposure are defined by an external trigger signal.
Use this mode for precise timing of image capture and to synchronize the camera with external devices.

Parameter	Value
Assigned port	SMA 1
Status	Off On
Signal polarity	Rising Falling

Due to the readout of the sensor, exposure only starts and ends at specific times determined by line timing. The exact timing is explained in the section **Timing characteristics** below. Since the camera's exposure time is limited, exposure stops automatically once the maximum exposure time is reached.

By default, exposure begins by the rising edge of the trigger signal and ends when the falling edge is detected. The signal frequency directly determines the frame rate as well as the duration of exposure. Without a trigger, no image is acquired.

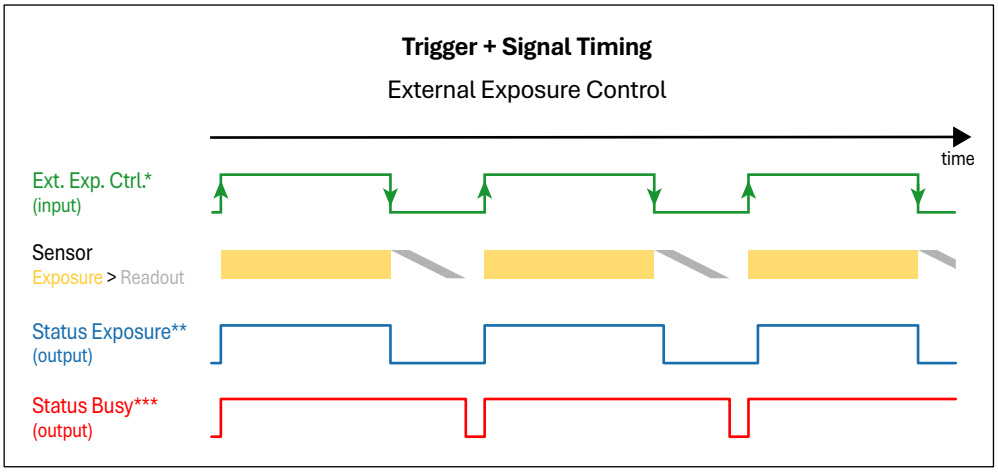

*Ext. Exp. Ctrl. is shown with signal polarity: Rising.
**Status Exposure is shown with signal polarity: High.
***Status Busy is shown with signal polarity: High.

The possible frame rate is limited by sensor readout and processing time, depending on the current configuration. In the External Exposure Control trigger mode, trigger events cannot be accepted during readout, as indicated by the Status Busy signal.

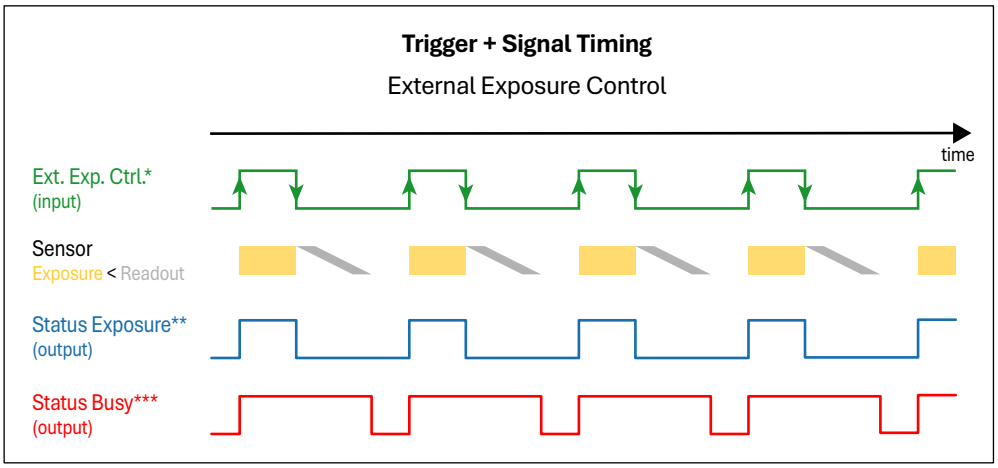

*Ext. Exp. Ctrl. is shown with signal polarity: Rising.
**Status Exposure is shown with signal polarity: High.
***Status Busy is shown with signal polarity: High.

If trigger pulses exceed the camera's capacity, some may be missed, resulting in fewer images captured than expected from the signal frequency.

If the external trigger input rate is too close to the maximum frame rate it becomes unpredictable whether a trigger is accepted or missed. Check the Status Busy signal to confirm that the camera can accept a new trigger.

Timing characteristics

After the camera receives the external trigger signal, there is a short processing delay before the start and end of sensor exposure. The following timing diagram illustrates this delay, followed by a table presenting precise delay measurements[13].

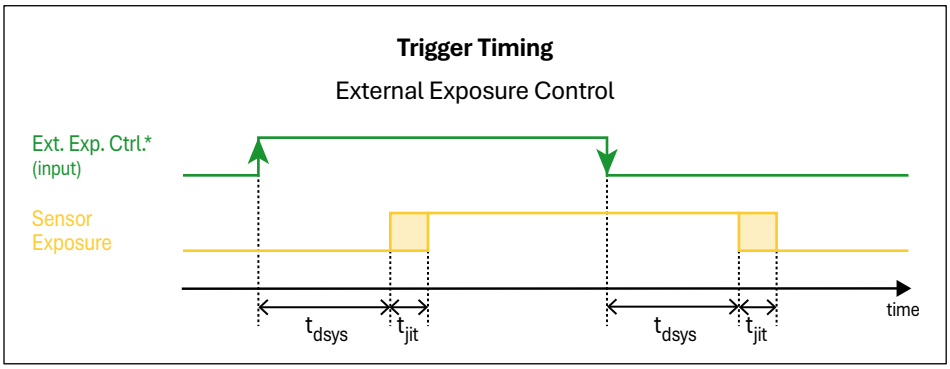

*Ext. Exp. Ctrl. is shown with signal polarity: Rising.

Parameter	pco.dimax 3.6 ST	pco.dimax 3.6 DS ST
t_{dsys} (system delay)	tbd	tbd
t_{jit} (jitter)	tbd	tbd

[13]Values are rounded to one decimal place.

pco.camware:
In Camera Properties (Expert) -> Hardware I/O Control -> Exposure Trigger choose ”On”.
Select Trigger Mode **Ext. Exp. Ctrl.**
Click ’Record’ and trigger from external source.

7.9 Utilizing Acquire Enable

Additional equipment required:
The Acquire Enable feature requires an external signal source and a connecting cable.

This feature is an additional option to control image acquisition by administering an external signal.

Acquire Enable can be used with the trigger modes Auto Sequence, External Exposure Start, and External Exposure Control. The Software Trigger is not affected by this signal.

Parameter	Value
Assigned port	SMA 2
Status	Off On
Signal polarity	High Low

As gate signal, Acquire Enable enables or disables image capture by permitting or rejecting trigger events. When the signal is active, the camera is allowed to capture images based on the selected trigger mode. When it is changed to inactive, image capture is blocked.

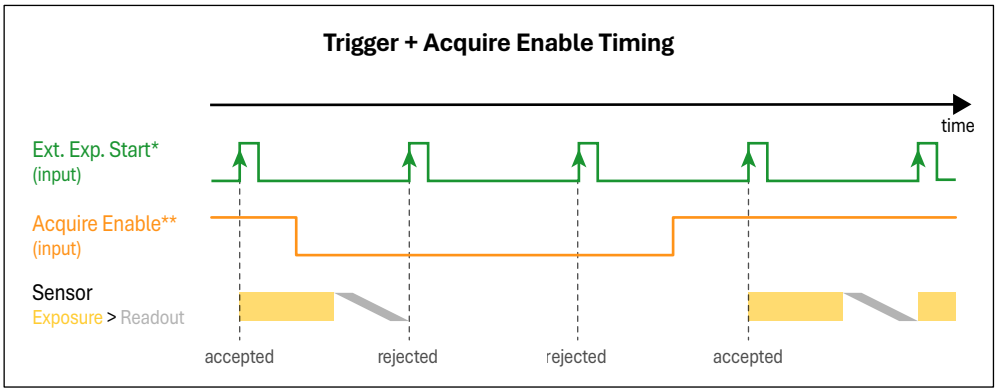

*Ext. Exp. Start is shown with signal polarity: Rising.
**Acquire Enable is shown with signal polarity: High.

Description for signal polarity ’High’:

While the Acquire Enable signal is high, images are captured based on the settings of the trigger mode. Once the Acquire Enable signal changes to low, new trigger signals are rejected and image acquisition is paused. As soon as the Acquire Enable signal returns to high, image acquisition resumes.

pco.camware:
In Camera Properties (Expert):
1. Hardware I/O Control -> Acquire Enable choose 'On' and desired signal polarity.
2. Recording Control -> Acquire Mode select 'External'.

7.10 Enabling sequence triggering

The camera supports two sequence recording modes. You can choose between **Sequence Trigger** and **Record Stop Sequence Trigger**.

This feature is an additional option to control image acquisition by administering an external signal. Set the sequence recording mode via software. The signal for external triggering is received via input port SMA 2.

Sequence recording can be used with any of the exposure triggers.

7.10.1 Sequence Trigger

Additional equipment required:
This mode requires an external trigger source and a connecting cable.

In Sequence Trigger, an external trigger signal starts the acquisition of a user-defined number of images with the current configurations. Once the sequence has finished, a new trigger can be used to start the next sequence.
Use this mode for streamlining acquisition in processes that require images only at specific points.

Parameter	Value
Assigned port	SMA 2
Status	Off On
Signal polarity	Rising Falling

While the camera is in recording mode, this trigger input starts an image acquisition sequence. After the sequence ends, recording continues, allowing the next trigger to start a new sequence. Trigger inputs received while a sequence is ongoing are ignored.

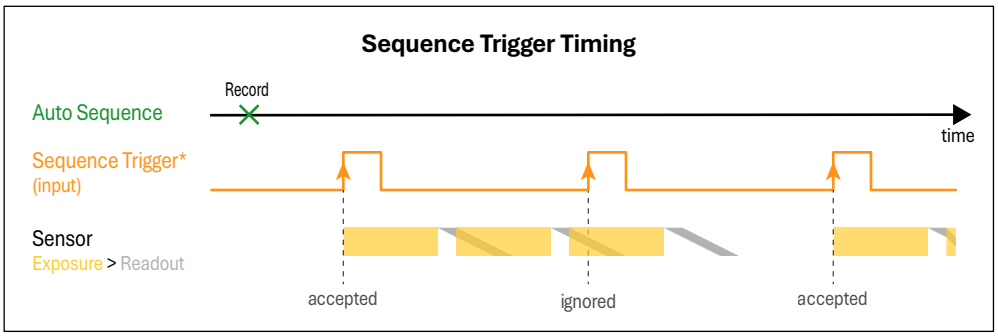

*Sequence Trigger is shown with signal polarity: Rising. Number of Images is set to n=3.

7.10.2 Record Stop Sequence Trigger

Additional equipment required:
This mode requires an external trigger source and a connecting cable.

In Record Stop Sequence, when image acquisition is running, the external trigger signal (also known as the T0 trigger) starts a countdown of a user-defined number of remaining images. Once these images have been captured, acquisition and recording stop.
Use this mode for capturing the full sequence of a transient event, from pre-event conditions through post-event effects.

Parameter	Value
Assigned port	SMA 2
Status	Off On
Signal polarity	Rising Falling

While the camera is in recording mode and acquiring images, this trigger input initiates an ending sequence. Trigger events received while an ending sequence is in progress are ignored. After the predefined number of images has been captured, image acquisition and recording stop. A new trigger event can only be accepted after recording has been restarted and image acquisition is active again.

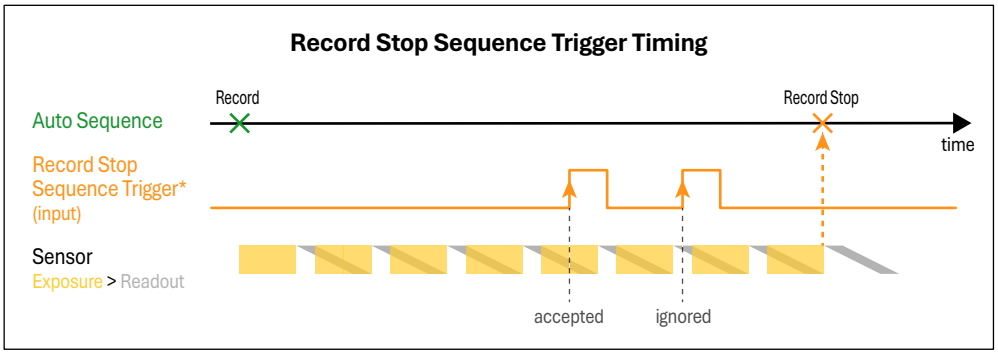

*Record Stop Sequence Trigger is shown with signal polarity: Rising. Delay Images is set to n=3.

8 Maintenance

This chapter provides essential guidance on the proper cleaning and storage of the camera to ensure long-term performance and reliability.

8.1 Cleaning

CAUTION
Risk of injury due to electric shock. Before cleaning any component unplug the camera.

8.1.1 General cleaning

Camera housing:
Use a soft, dry cloth to dust off the camera housing.

Data port/FOL connectors:
Use specialized MTP/MPO cleaners to clean the data port or any FOL connectors.

Power port, lens control port and SMA connectors:
Use compressed air or a soft, anti-static brush to remove dust.

Lens:
Refer to the manual of the respective lens for information.

8.1.2 Input window cleaning

NOTICE: Only clean the sensor's input window if absolutely necessary. Do not touch the input window, as this may scratch and damage the glass.

How to be sure the dust is on the input window:

- Capture a uniform image, e.g. of a white sheet of paper.
- Rotate the camera lens.
- Capture another image, are the dark spots in the same position?

  ⇒ NO: Dust is not on the input window, no need to clean it.

  ⇒ YES: Dust is on the input window.

Clean with compressed air:

- Disconnect from power and any cables.
- Remove the lens and lens mount adapter.

- Blow out the input window with clean compressed air.

8.2 Storage

Read this section to learn about the proper storage conditions to protect the camera system.

Dust-free environment:
Store the camera system in a dust-free environment to keep dust from entering the camera housing.

Dry environment:
Store the camera in a non-condensing environment within the specified humidity range to keep moisture from entering the camera housing.

Temperature:
Store the camera within the specified temperature range.

Secure location:
Make sure to keep the camera in a secure location so it does not fall down or get damaged.

Protect input window:
Always store the camera with the protective cover or a lens attached to avoid dust and dirt on the input window.

Protect FOL cable:
Do not bend the FOL cable for storage to avoid breaking the fibers.

Protect FOL connectors:
Always store the camera with the protective covers on the data port and the FOL cable to avoid dust and dirt on the connectors.

Disconnect liquid cooling system:
Disconnect the camera from the liquid cooling system, but leave the coolant connectors attached to prevent any residual coolant from leaking.
For adequate storage of the liquid cooling system refer to the respective manual.

9 Troubleshooting

Issue	Solution
Status LED red, indicating error	Check camera health status or contact our customer support.
Software does not recognize camera	• Check FOL cable for kinks. • Clean all connectors with an MTP/MPO cleaner. • Reattach all the connectors: The single connector on the camera needs to lock in with a noticeable click, while the four multi-connectors slide in with light resistance. • Check frame grabber. • Update/Reinstall software.
Camera shuts off by itself	Check if the camera is overheating.
Issues with frame grabber	Refer to the troubleshooting guide for frame grabbers (CLHS interface).

Where to find the camera's serial number:

- Camera housing: The serial number is on a label on the bottom of the camera.
- pco.camware: In the Camera Properties menu in the Camera section at the top.

Where to find the installed firmware version:

- pco.camware: In the Camera Properties menu in the Camera section at the top.

For any other questions or problems, feel free to use the following options:

- Read the pco.troubleshooting manual for help with a PCO software product.
- Fill out the support ticket on our website.

10 Recycling

The camera and its accessories include electronic devices, which contain materials harmful to the environment. These electronic devices must be recycled.
To safely dispose of your camera, take it to your local recycling center or return it to Excelitas PCO GmbH.

11 Warranty

Please be advised that all quotations and sales of products by Excelitas PCO GmbH are subject to the General Terms and Conditions of Sale. Within these terms, we stipulate a 12-month warranty period commencing from the date of shipment to the buyer.

In the event of a claim under this guarantee, the equipment is to be sent, including a description of the fault, to Excelitas PCO GmbH. Returned equipment will not be accepted without a ticket number issued by the support team, which is available under the email address pco@excelitas.com.

Follow shipping instructions provided by the service technician. The unit should be returned in its original packaging if possible. In the case of damage caused by wear and tear, careless handling, neglect, by the use of force or in the case of interventions and repairs not carried out by Excelitas PCO GmbH, the guarantee ceases to be valid. This guarantee may not form the basis for any claims for damages, in particular not for compensation of consequential damages. The warranty is not transferable.

About Excelitas

Excelitas is a leading provider of advanced, life-enriching technologies that make a difference, serving global market leaders in the life sciences, advanced industrial, next-generation semiconductor and avionics end markets.

Headquartered in Pittsburgh, PA, USA, Excelitas is an essential partner in the design, development and manufacture of advanced technologies, offering leading-edge innovation in sensing, detection, imaging, optics and specialty illumination for customers worldwide. Excelitas is at the forefront of addressing many of the relevant megatrends impacting the world today, including precision medicine, industrial automation, artificial intelligence and connected devices (IoT).

excelitas Enabling the future

+49 9441 2005 0

+1 866 662 6653
USA and CAN

+86 0512 6763 4643
Asia

Donaupark 11
93309 Kelheim
Germany

excelitas.com
pco@excelitas.com

For a complete listing of our global offices, visit www.excelitas.com/locations

© 2026 Excelitas Technologies Corp. All rights reserved. The Excelitas logo, Excelitas® and PCO® are registered trademarks, pco.vision™ and MachVis™ are trademarks of the Excelitas group of companies. All other products and services are either trademarks or registered trademarks of their respective owners. Excelitas reserves the right to change this document at any time without notice and disclaims liability for editorial, pictorial or typographical errors.