Fiber Coupler
User Manual

User Manual
For the Fiber Coupler FCSM-PM Fiber Coupler FCSM-PM
Version: 2.3
Date: December 13, 2020

This document is protected by copyright. Do not copy or publish this document or parts of it without written permission of RGB Lasersystems GmbH .

Product specifications and descriptions in this manual are subject to change without notice. RGB Lasersystems GmbH will not be responsible for errors and omissions in this manual or for direct or incidental damages in connection with the use of this device or information.

© 2020 RGB Lasersystems GmbH
Donaupark 13
93309 Kelheim
Germany

Telephone: +49 9441 1750 33 – 0
Website: http://www.rgb-photonics.com
E-Mail: sales@rgb-photonics.com

Contents

Contents i

1 Introduction 1

2 Alignment 3

3 Specifications 7
3.1 Optical Specifications 7
3.2 Mechanical specifications 7

4 Certifications and Compliance 9

Acronyms 13

1 Introduction

The FCSM-PM couples a collimated laser beam into a single mode polarization-maintaining optical fiber. It can also be used with non-polarization-maintaining and multi mode fibers. It is intended to be used with the Lambda beam series of compact laser modules, but should also work fine with other lasers.

In order to get the best coupling efficiency, the laser beam must be precisely focused on the end of the optical fiber. Because this requires micrometer precision, the alignment needs to be done by the user after the laser and the optical fiber are attached to the fiber coupler.

The following chapter describes in detail the steps necessary to align the fiber coupler. You may need some patience, but if you follow the instructions closely, you should be able to align the fiber coupler in less than thirty minutes. As with all optical alignments, it may take longer the first time, but you'll quickly gain experience and learn how to do it faster.

If you have trouble aligning the fiber coupler, please contact our support department via phone or e-mail. You can find the contact details on our website www.rgb-photonics.com or in the beginning of this manual.

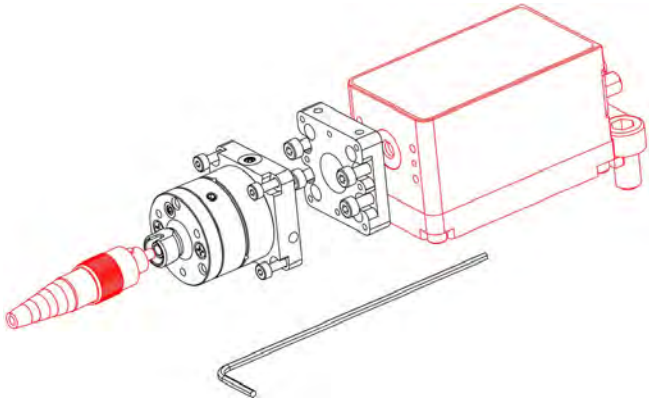

Figure 1.1: explosion drawing

2 Alignment

In order to get the best coupling efficiency, you need an optical power meter to measure the actual output on the other end of the optical fiber. If you don't have a power meter, you can also direct the other end of the fiber towards a white sheet of paper and observe the visible intensity of the spot (use an IR detector card if you have an IR laser). However, this may not be as accurate as a power meter. Alternatively, you may also find it faster to do a coarse alignment first without a power meter and then the final alignment with a power meter.

Preparations

1. Make sure that the Laser is switched off.

2. Attach the fiber coupler to the laser module (see figure 1).

3. Connect one end of the fiber to the fiber adapter. The other end should point at a power meter to monitor the output power.

4. Now switch on the laser using low laser power (<10 mW) to avoid damage to the fiber during further adjustments.

5. Never look directly into the fiber and observe all laser safety precautions as described in the user manual for your laser.

Centering the laser beam onto the fiber

Start adjusting the fiber coupler by turning the three positioning screws one after the other up to half a turn in each direction, until the power meter detects a signal. If a signal is already being detected, try to increase it by turning the positioning screws one after the other up to half a turn in the direction that maximizes the output power. The positioning screws are located in the beveled drill holes and are labeled in figure 1. Once the output power is maximized, the laser power can be increased to a desired value in order to make further adjustments easier. (Please note the difference between laser power and fiber output power!)

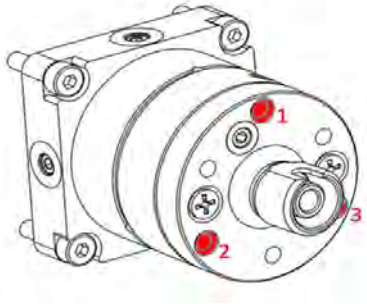

Figure 2.1: use screws 1, 2 and 3

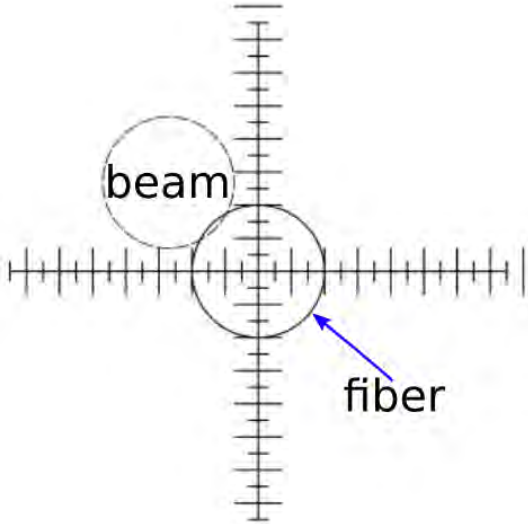

Figure 2.2: Centering the laser beam onto the fiber

Adjustment of the focal point to the fiber surface

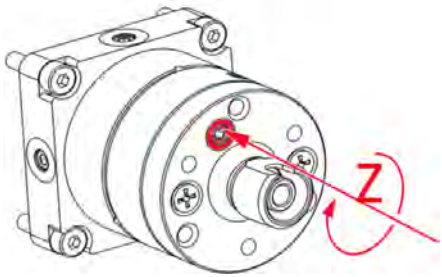

Figure 2.3: Screw for focal adjustment

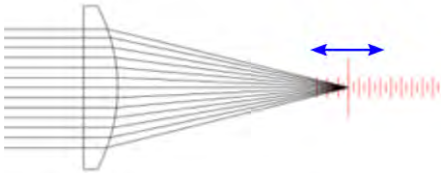

Figure 2.4: Adjusting the focal point to the fiber surface

Continue adjusting the fiber coupler by turning the z-screw shown in figure 2 in the direction in which the output power increases. Once the maximum power is reached, repeat the steps explained in figure 1 and adjust the z-screw once again. The more output

power you gain, the smaller are the adjustments necessary to get a further increase.

For single mode fibers

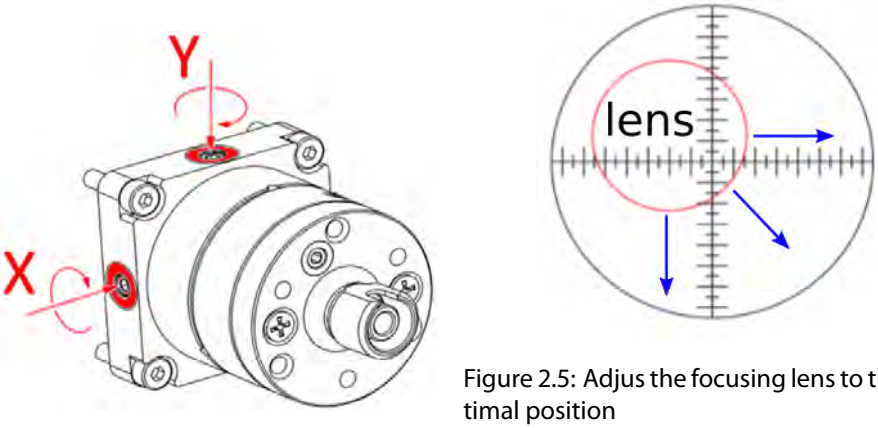

Figure 2.5: Adjus the focusing lens to the optimal position

By repeating the steps explained in figure 1 and 2 several times, the output power should reach approximately 30 % to 40 % of the laser power. Now the x/y-screws shown in figure 3 can be used to make slight adjustments of the fiber coupler in x and y direction. The x/y-screws are less sensitive and can be adjusted more than once during the alignment procedure. The final adjustment of the fiber coupler should be done by turning the positioning screws very slightly until you reach a maximum output power of approximately 60 %.

Locking the fiber coupler

After adjusting, the fiber coupler can be locked by turning the locking screws 7 and 8 shown in fig. 2.6 clockwise until you feel a resistance. Locking the fiber coupler is not necessary if the laser module is fixed on a breadboard. If a single mode fiber is used, turning the locking screws can also decrease the output power.

Resetting the fiber coupler

If you have trouble obtaining any output power after several attempts, please reset the fiber coupler to its initial position:

Turn the positioning screws counter clockwise as far as it will go. Next turn the clamping screws 4, 5 and 6 shown in fig. 2.6 counter-clockwise until you don't feel any resistance

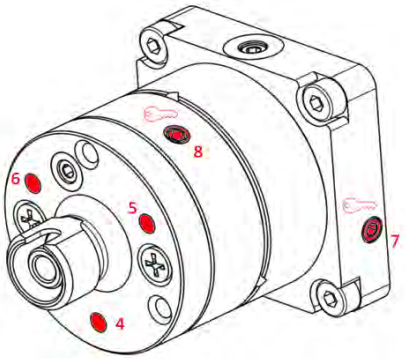

Figure 2.6: Lock the fibercoupler by carefully tightening the screws 7 and 8

while screwing. Now find the position where the clamping screws start to take effect and keep turning them beyond that point clockwise by half a turn. In the same way turn the positioning screws clockwise by one turn. In a final step turn the z-screw clockwise as far as it will go and back it off by one turn.

3 Specifications

3.1 Optical Specifications

Wavelength ranges:	300 nm to 680 nm
	650 nm to 110 nm
	1050 nm to 1600 nm
Coupling efficiency:	50 % to 70 %
Fiber connectors:	FC, FCAPC or SMA (alternatively)

3.2 Mechanical specifications

Length:	40.0 mm (including adapter plate)
Width:	25.0 mm
Height:	25.0 mm
Weight:	75 g

3D computer-aided design (CAD) files are available for download on www.rgb-photonics.com.

4 Certifications and Compliance

CE Declaration of Conformity

The manufacturer

```
RGB Lasersystems GmbH
Donaupark 13
93309 Kelheim
```

declares that the following product

```
Fiber Coupler FCSM-PM    Version 1.0
```

complies with the following normative documents

```
EN6100-6-4: 2007 + A1:2011
EN6100-6-2: 2005
```

and therefore with the following EG requirements

```
Electromagnetic compability (2014/30/EU)
```

This declaration applies to all models of the above named product version, in case it will be unsed in the configuration of the tesst assembly.

Kelheim , November 19th, 2020

Stefan Englbrecht

FCC Compilance

This declaration applies to the following product:

`Fiber Coupler FCSM-PM  Version 1.0`

This device complies with part 15 of the FCC Rules. Operation is subject to the following two conditions: (1) This device may not cause harmful interference, and (2) this device must accept any interference received, including interference that may cause undesired operation.

This equipment has been tested and found to comply with the limits for a Class A digital device, pursuant to Part 15 of the FCC Rules. These limits are designed to provide reasonable protection against harmful interference when the equipment is operated in a commercial environment. This equipment generates, uses and can radiate radio frequency energy and, if not installed and used in accordance with the instruction manual, may cause harmful interference to radio communications. Operation of this equipment in a residential area is likely to cause harmful interference in which case the user will be required to correct the interference at his own expense.

Kelheim , November 14th, 2020 Stefan Englbrecht

RoHS Declaration of Conformity

The manufacturer

```
RGB Lasersystems GmbH
Donaupark 13
93309 Kelheim
```

declares that the following product

```
Fiber Coupler FCSM-PM    Version 1.0
```

contains no toxic substances which are specified in the

```
RoHS Directive 2011/65/EU.
```

The conformity to RoHS Directive 2011/65/EU is condirmed

This declaration applies to all models of the above named product version, in case it will be unsed in the configuration of the tesst assembly.

Kelheim , October 12th, 2020

Stefan Englbrecht

WEEE Directive

Please respect the Waste Electrical and Electronic Equipment (WEEE) directive 2012/19/EU and do not throw you RGB Lasersystems GmbH product into waste disposal but recycle it.

Acronyms

CAD computer-aided design. 7
CE Conformité Européenne. 9

FCC Federal Communications Commission. 10

RoHS Restriction of the use of certain hazardous substances. 11

WEEE Waste Electrical and Electronic Equipment. 11

東京インスツルメンツ
TOKYO INSTRUMENTS
本　社：〒134-0088 東京都江戸川区西葛西6-18-14 T.Uビル
TEL：03-3686-4711　FAX：03-3686-0831
大阪営業所：〒532-0003 大阪市淀川区宝町8-41-6(新大阪第2ビル)
TEL：06-6393-7411　FAX：06-6393-7055